200 + 300 SERIES – PRODUCT OVERVIEW

400kW – 4000kW

Performance **Reliability** Simplicity

VERSION 4.1

Company Profile

Doen Waterjets have been designed and manufactured by Doen in Melbourne, Australia since 1970.

- Over 35 years experience in design and application engineering. We have a policy of continuous improvement through ongoing research and development.
- All models built to meet the exacting standards of marine classification societies.
- Doen's key design criteria are high performance, reliability and simplicity of construction and maintenance. Our axial flow waterjets provide compact and efficient performance at speeds up to 45 knots combined with exceptional low speed thrust and load carrying capability.
- Global distribution network provide sales & service support for waterjets in the most demanding commercial operations throughout the world.

Global Sales & Service Support

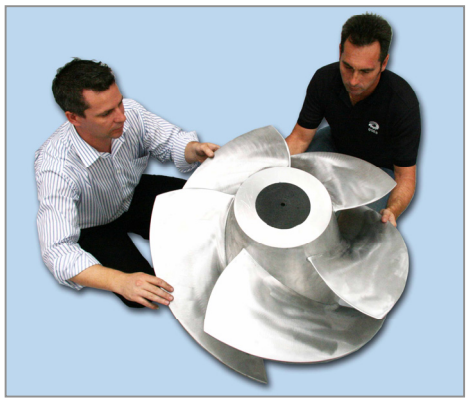

1960's

1970's

1980's

1990's

2000

TODAY

Performance **Reliability** Simplicity

Model Range – 200 + 300 SERIES specifications

		200 SERIES				300 SERIES	
		DJ200	DJ220	DJ260	DJ290	DJ330	DJ350
Power RangekW[1] (hp)		1000 (1340)	1150 (1540)	1600 (2145)	2000 (2680)	2750 (3690)	3200 (4290)
Max.Rpm		1650	1525	1290	1160	1020	960
Weight Kg (lbs)	Dry[2]	875 (1930)	1050 (2315)	1700 (3750)	2340 (5160)	3250 (7165)	3650 (8050)
Construction	Intake Duct	Aluminium Plate **OR** Mild Steel					
	Main Shaft	Stainless Steel SAF2205 S/S					
	Impeller	Stainless Steel casting CF8M S/S					
	Imp.Housing	Aluminium & S/S		Stainless Steel AISI 316 S/S			
	Stator	Aluminium		Stainless Steel CF8M S/S + AISI 316 S/S			
	Steering Nozzle	Aluminium ASTM A356					
	Reverse Duct	Aluminium ASTM A356 + Aluminium Plate 5083#					
Dimensions[3] mm	A	1420	1855	1980	2205	2430	2430
	B	1935	2080	2520	2835	3505	3505
	C	1015	1290	1365	1565	1755	1755
	D	430	460	540	600	685	685
	E	1550	1670	1940	2195	2550	2630
	F	1100	1200	1470	1700	2040	2040
	G	830	840	950	1040	1250	1250
	H[4]	90°	90°	90°	90°	90°	90°
Note	(1)	Maximum Rec.Continuous Power, Higher Sprint Rating Possible					
	(2)	Includes Std. Reverse Control System - Excludes Entrained Water					
	(3)	Typical only. Not to be used for construction purpose					
	(4)	Standard Stated - Custom Shaft angles also available this model					

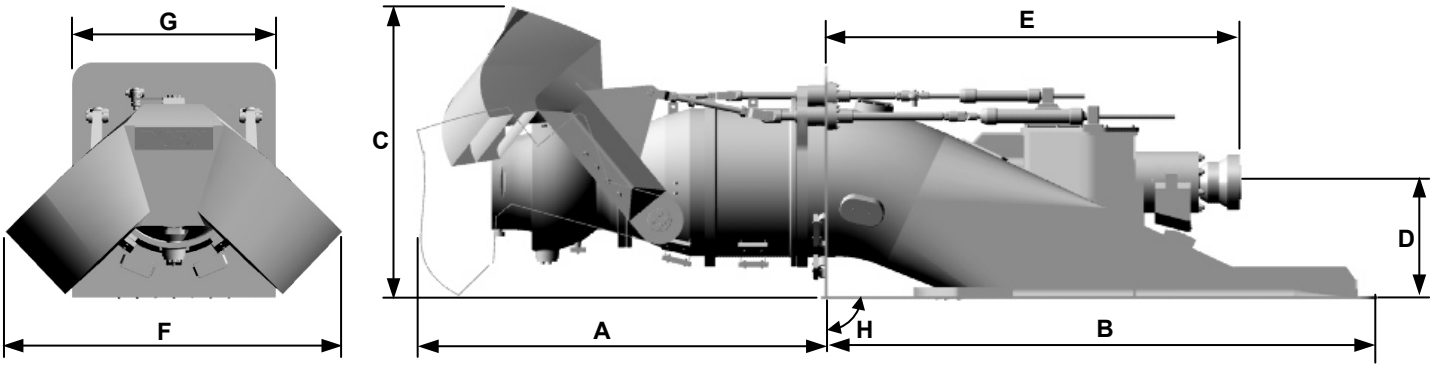

Performance **Reliability** Simplicity

Product Matrix

DOEN WATERJET MODELS	DJ200	DJ220	DJ260	DJ290	DJ330	DJ350
CONTRUCTION						
ALUMINIUM CONSTRUCTION	●	●				
STAINLESS STEEL PUMP ASSEMBLY		●	●	●	●	●
PRODUCT VARIANTS						
BOOSTER JETS	●	●	●	●	●	●
DIRECT THRUST VERSION	●	●	●	●	●	●
INTEGRATED WATERJET (frp intake)	●	●	●			
CONTROL SYSTEMS -Electronic						
ECS-100	●	●	●			
ECS-200	●	●	●			
CAN BUS	●	●	●	●	●	●
Joystick Docking - eDOCK	●	●	●	●	●	●
CONTROL SYSTEMS -Hydraulic						
Vane pump system - suit RSC[(A)]	●	●				
Vane pump system - suit ECS100	●	●				
Variable displacement pump system		●	●	●	●	●

note (A): RSC = Rotary Servo control

Pre Fabricated Duct - Feature

DOEN 200 + 300 series WATERJETS use a fabricated intake duct mounting system.

- The prefabricated duct is manufactured in Aluminium or Steel to suit the hull material.
- Made using only plate and wrought material the resulting duct structure is extremely **Strong** and **Lightweight**
- The duct is supplied as a complete machined part ready to **Weld** in or Bolt in (Fiberglass vessels). The benefit to the ship builder is quicker installation times, built to exacting dimensions as a finished item requiring no re-work.
- Maximum hull integrity is achieved through the fully welded installation.
- Custom designs are possible to optimise vessel performance and to improve installation and machinery interfacing.

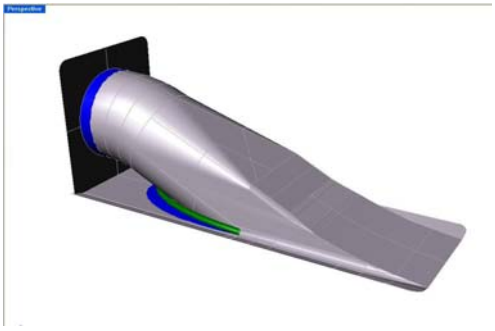

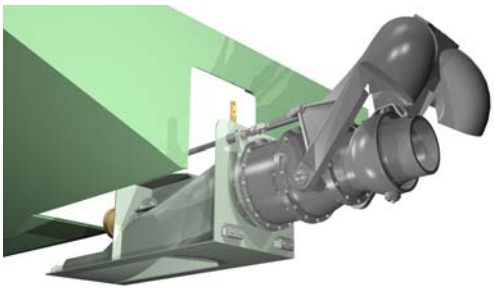

Performance **Reliability** Simplicity

Modular Design and Construction

Doen 200+300 series - constructed using simple modular designs, no special tools required

- **Pump Assembly** - manufactured completely from stainless steel materials providing maximum service life and extreme resistance to erosion, corrosion and cavitation. **NOTE**:Aluminium Option available on DJ200,DJ220, DJ260
- **Shaft Assembly** – duplex stainless steel main shaft with oil lubricated inboard thrust bearing assembly, water lubricated rear bearing and face type shaft seal. Simple Doen taper lock coupling system for both impeller and input coupling.
- **Steering & Reverse** – balanced nozzle and split duct reverse bucket operated by hydraulic cylinders mounted completely inboard. All hydraulic hose connections and position sensors inboard.

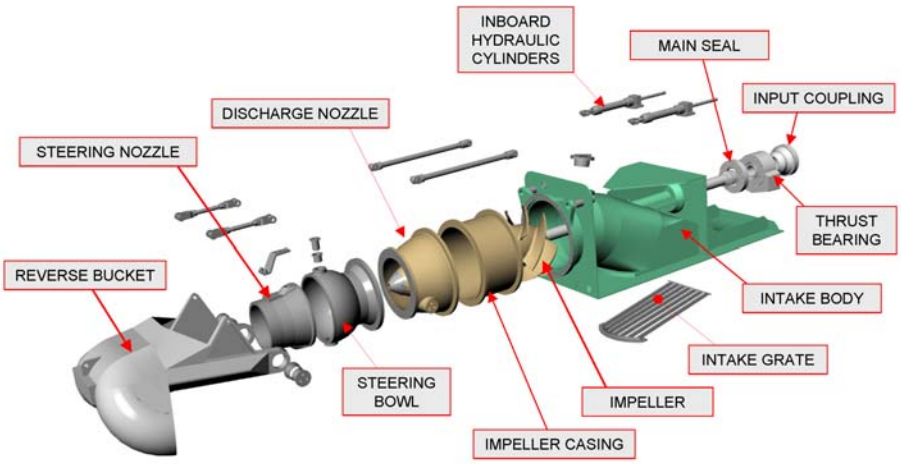

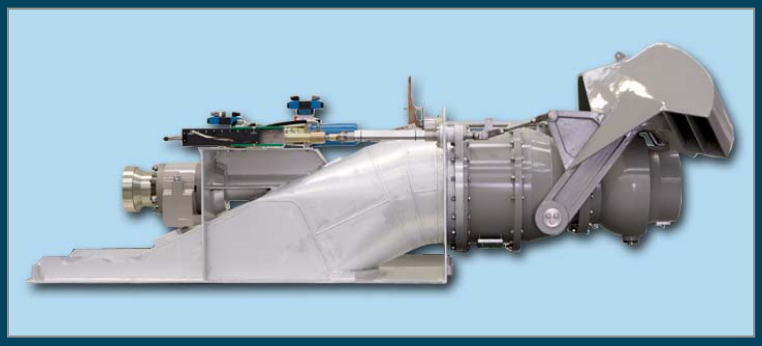

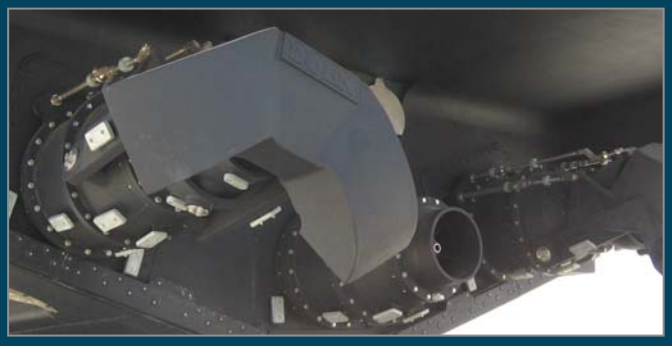

Performance **Reliability** Simplicity

Control Systems

DOEN WATERJETS

The DOEN 200 + 300 series uses a CAN BUS electronic system.

Fully integrated multi-station waterjet, engine and marine gear control system providing alarm, monitoring function, back-up and emergency control.

- **Propulsion -** Single lever combined engine throttle and waterjet reverse; by way of electronic follow up control over hydraulic operation.
- **Steering -** Electronic follow up steering by way of electronic follow up control over hydraulic operation.
- **Indication-** Reverse and steering position indicators by way of Analogue gauges.
- **Docking Joystick-** Multi function electronic joystick for single lever vector control and close quarter docking.

eDOCK joystick control

FEATURES:

- **CAN BUS technology –** multiple redundant bus
- **Control interface options –** levers, rotary heads, wheels
- **Distributed processing by independent CPU's**
- **Configurable set-up**
- **Outputs – providing for** :bow thruster interface
  :data logging
  : LCD screens

Performance **Reliability** Simplicity

200 SERIES

MODEL DJ200

- Technical Specifications
- General Arrangement Drawing

Performance **Reliability** Simplicity

DJ200 TECHNICAL SPECIFICATIONS

UNIT DETAILS

Maximum Rec. Power Continuous:	up to 1000skW (1340shp)
Maximum Rec. Power Sprint:	up to 1200skW (1610shp)[(A)]
Maximum Rec Impeller speed:	1650rpm
Dry Weight:	875 kg (complete waterjet including jet mounted hydraulic items)
Entrained Water:	220 kg
Loss of buoyancy	0.275m^3 (duct volume within hull bound)
Corrosion Protection:	Cathodic with Anodes
Design Standard:	To international authority standards

CONSTRUCTION DETAILS

Impeller:

Diameter:	520mm
No of Stages/Configuration:	Single Stage – Axial pump construction
Standard Rotation:	Anti-clockwise (Looking forward from stern)
Impeller Material:	Cast CF8M Stainless Steel

Pump Assembly:

Impeller Casing Material:	Cast ASTM A356 Alum. Alloy with stainless steel liner
Discharge Nozzle Material	Cast ASTM A356 Alum.

Steering System:

Description	Balanced nozzle
Operation	Hydraulic with Inboard tiller actuation
Steering Bowl/Nozzle Material:	Cast ASTM A356 Aluminium Alloy

Reverse System:

Description	Split Duct Type – “High Thrust”
Operation	Hydraulic with twin Inboard cylinder actuation
Reverse duct material	Cast ASTM A356 & 5083 grade plate aluminium

Shaft Assembly:

Main Shaft Material:	Stainless Steel Grade SAF 2205
Rear Bearing:	Water Lubricated Cutlass Bearing
Main Bearing:	Spherical roller Thrust Bearing Spherical roller Bearing - Radial
Lubrication	Oil lubrication
Shaft Seal:	Face type Mechanical Seal
Coupling Flange:	GWB Series to suit application
Shaft Angle	0 degrees standard – Custom shaft angles available

Intake Duct:

Material:	5083 grade plate aluminium
Inspection Opening:	Inboard
Intake Grate:	Removable Stainless Steel Bars

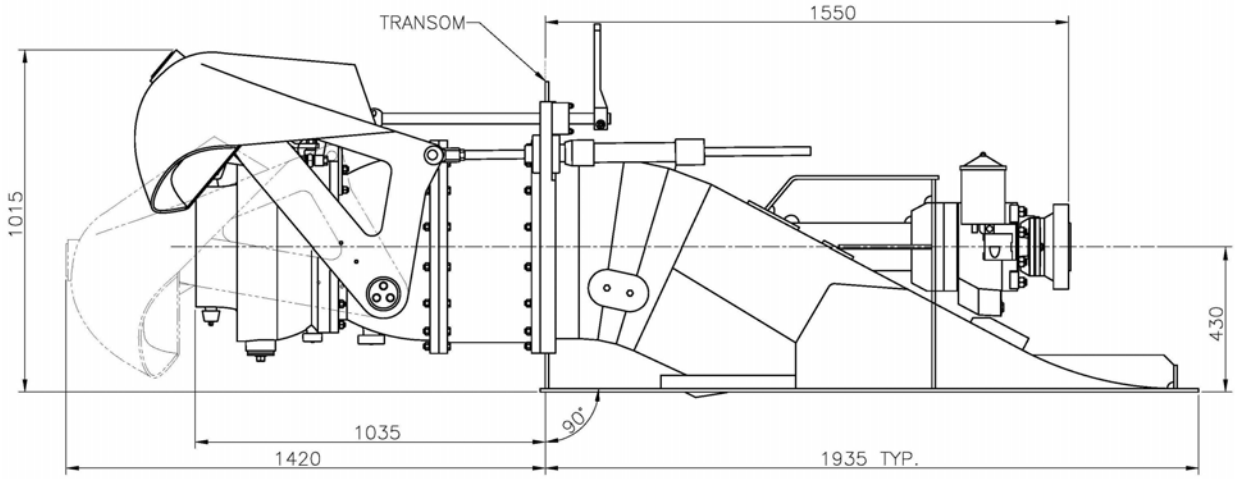

Note (A): Requires application approval by DOEN Pacific
Due to our policy of continuous Research & Development, we reserve the right to change the specifications without notice

H:\Commonfiles\ENGINEERING\AutoCAD\

REVISION			
ITEM No.	DESCRIPTION	BY	DATE

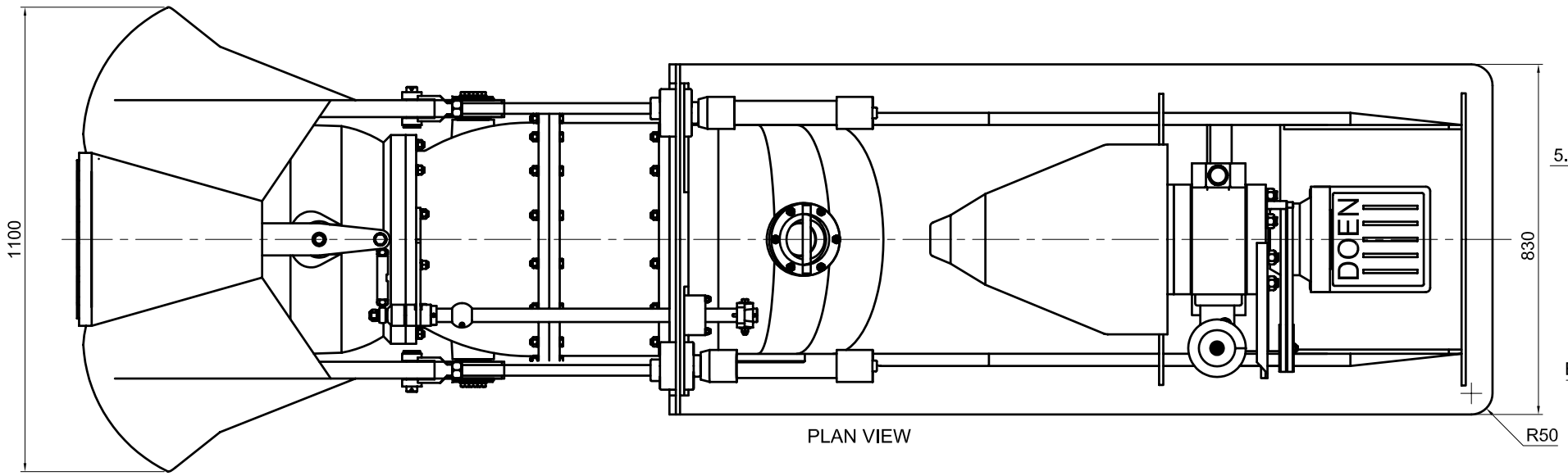

PLAN VIEW

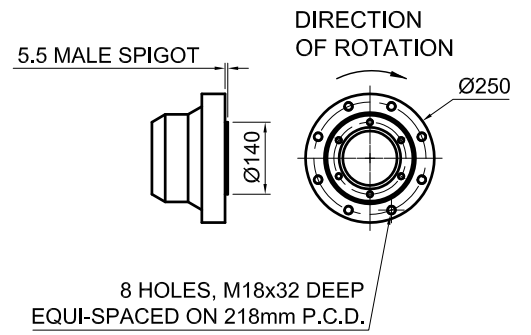

VIEW OF STANDARD DRIVE FLANGE

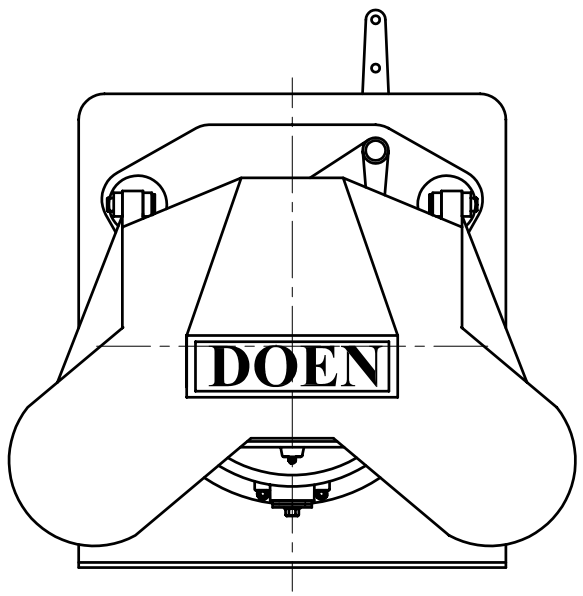

OUTBOARD VIEW

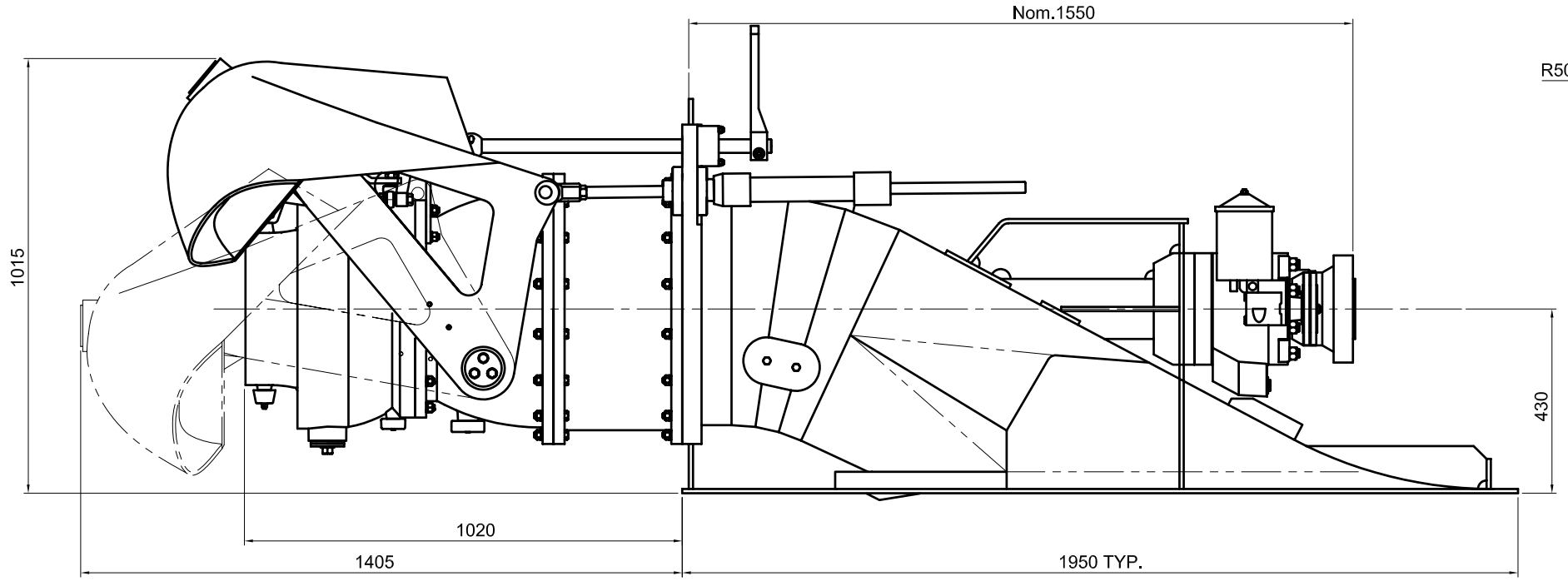

PROFILE VIEW

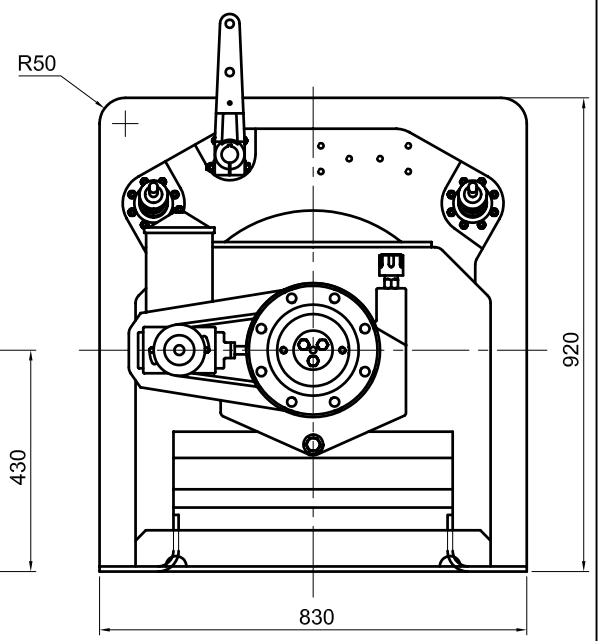

NOTE: DUE TO OUR POLICY OF CONTINUAL DEVELOPMENT
DRAWINGS SUBJECT TO CHANGE WITHOUT NOTICE

NOTE: UNITS CAN HANDED STANDARD ARRANGEMENT SHOWN

UNLESS OTHERWISE STATED ALL DIMENSIONS IN MILLIMETRES		DRN P.PEIRIS	DOEN PACIFIC PTY. LTD.
		CKD T.UDVARY	
TOLERANCES LINEAR : +/- 0.4 ANGULAR : +/- 0.5°	MATERIAL	APPD T.UDVARY	TITLE DJ200 GENERAL ARRANGEMENT
		ISSUED 08-09-2011	
		MODELS DJ200	
DRAFTING STANDARD AS 1100	FINISH		SIZE A3 / DRG. No. 200-110-0000-001
			SCALE NONE AS PRINTED

200 SERIES

MODEL DJ220

- Technical Specifications
- General Arrangement Drawing

Performance **Reliability** Simplicity

DJ220 TECHNICAL SPECIFICATIONS

UNIT DETAILS

Maximum Rec. Power Continuous:	up to 1150skW (1540shp)
Maximum Rec. Power Sprint:	up to 1380skW (1850shp)
Maximum Rec Impeller speed:	1525rpm
Dry Weight:	1050 kg (complete waterjet including jet mounted hydraulic items)
Entrained Water:	310 kg
Loss of buoyancy	0.325 m^3 (duct volume within hull bound)
Corrosion Protection:	Cathodic with Anodes
Design Standard:	To international authority standards

CONSTRUCTION DETAILS

Impeller:

Diameter:	22 inch (559mm)
No of Stages/Configuration:	Single Stage – Axial pump construction
Standard Rotation:	Anti-clockwise (Looking forward from stern)
Impeller Material:	Cast CF8M Stainless Steel

Pump Assembly:

Impeller Casing Material:	Cast ASTM A356 Alum. Alloy with stainless steel liner
Discharge Nozzle Material	Cast ASTM A356 Alum.

Steering System:

Description	Balanced nozzle
Operation	Hydraulic with Inboard tiller actuation
Steering Bowl/Nozzle Material:	Cast ASTM A356 Aluminium Alloy

Reverse System:

Description	Split Duct Type – “High Thrust”
Operation	Hydraulic with Dual Inboard cylinder actuation
Reverse duct material	Cast ASTM A356 & 5083 grade plate aluminium

Shaft Assembly:

Main Shaft Material:	Stainless Steel Grade SAF 2205
Rear Bearing:	Water Lubricated Cutlass Bearing
Main Bearing:	Spherical roller Thrust Bearing Spherical roller Bearing - Radial
Lubrication	Oil lubrication
Shaft Seal:	Face type Mechanical Seal
Coupling Flange:	GWB Series to suit application
Shaft Angle	0 degrees standard – Custom shaft angles available

Intake Body:

Material:	5083 grade plate aluminium
Inspection Opening:	Inboard
Intake Grate:	Removable Stainless Steel Bars

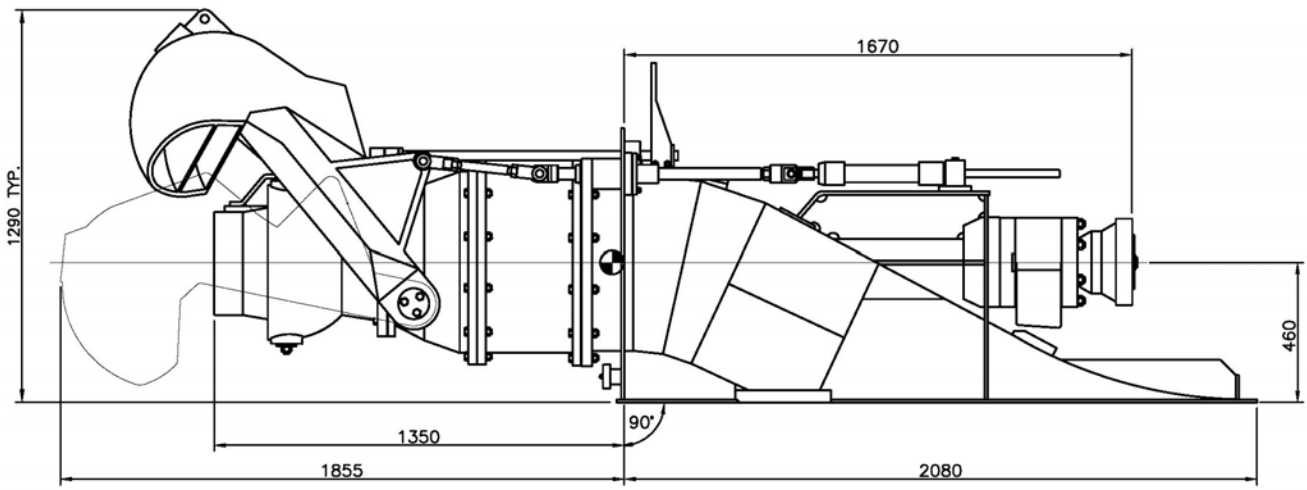

Note (A): Requires application approval by DOEN Pacific.
Due to our policy of continuous Research & Development, we reserve the right to change the specifications without notice

H:\Commonfiles\ENGINEERING\AutoCAD\

REVISION			
ITEM No.	DESCRIPTION	BY	DATE

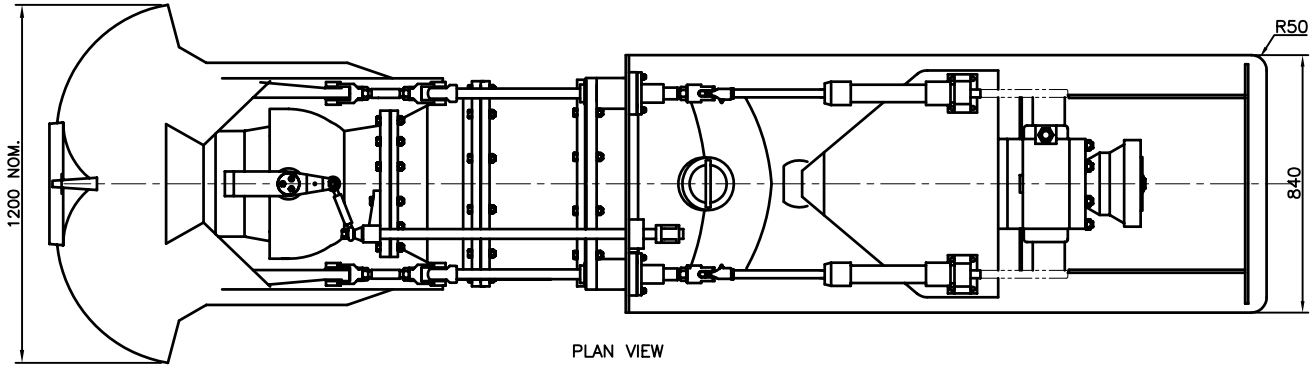

PLAN VIEW

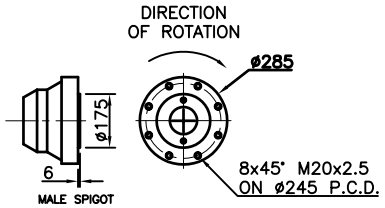

STANDARD COUPLING FLANGE
GWB–587–55

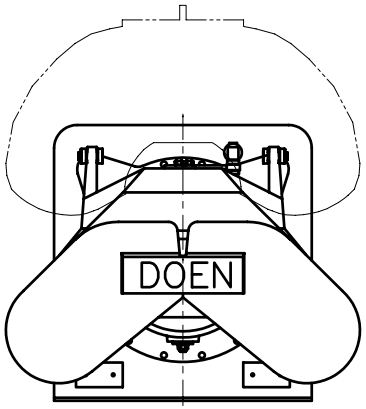

OUTBOARD VIEW

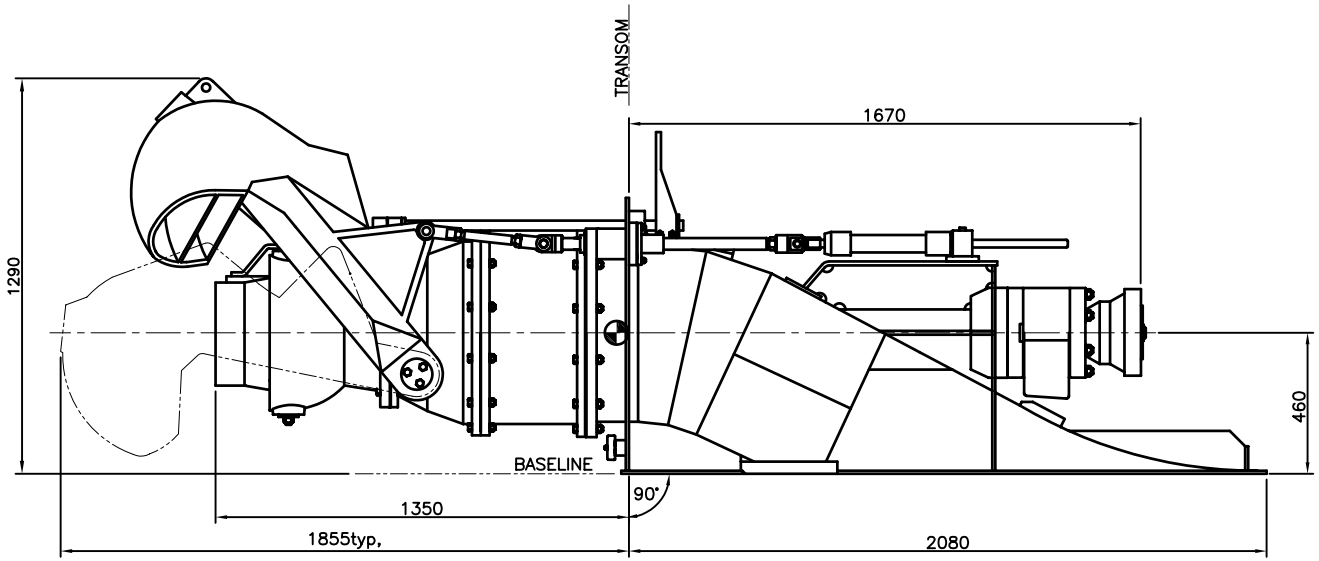

PROFILE VIEW

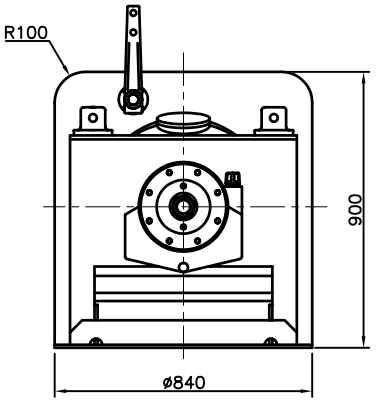

INBOARD VIEW

NOTE: DUE TO OUR POLICY OF CONTINUAL DEVELOPMENT
DRAWINGS SUBJECT TO CHANGE WITHOUT NOTICE

UNLESS OTHERWISE STATED ALL DIMENSIONS IN MILLIMETRES		DRN P.PEIRIS	DOEN PACIFIC PTY. LTD.
TOLERANCES LINEAR : +/- 0.4 ANGULAR : +/- 0.5°	MATERIAL	CKD T.UDVARY	TITLE DJ220
		APPD T.UDVARY	GENERAL ARRANGEMENT
		ISSUED 05-05-2008	
		MODELS DJ220	
DRAFTING STANDARD AS 1100	FINISH	SIZE A3	DRG. No. 220-110-0000-004
		SCALE NONE AS PRINTED	

200 SERIES

MODEL DJ260

- Technical Specifications
- General Arrangement Drawing

Performance **Reliability** Simplicity

DJ260 TECHNICAL SPECIFICATIONS

UNIT DETAILS

Maximum Rec. Power Continuous:	Up to 1600skW (2145shp)
Maximum Rec. Power Sprint:	Up to 1940skW (2600shp)
Maximum Rec Impeller speed:	1290rpm
Dry Weight:	1700 kg (complete waterjet including jet mounted hydraulic items)
Entrained Water:	492 kg
Loss of buoyancy	0.555 m^3 (duct volume within hull bound)
Corrosion Protection:	Cathodic with Anodes
Design Standard:	To international authority standards

CONSTRUCTION DETAILS

Impeller:

Diameter:	26 inch (660mm)
No of Stages/Configuration:	Single Stage – Axial pump construction
Standard Rotation:	Anti-clockwise (Looking forward from stern)
Impeller Material:	Cast CF8M Stainless Steel

Pump Assembly:

Impeller Casing Material:	AISI 316 Stainless Steel
Discharge Nozzle Material	Cast CF8M & AISI 316 Stainless Steel

Steering System:

Description	Balanced nozzle
Operation	Hydraulic with Inboard cylinder actuation
Steering Bowl/Nozzle Material:	Cast ASTM A356 Aluminium Alloy

Reverse System:

Description	Split Duct Type – “High Thrust”
Operation	Hydraulic with Dual Inboard cylinder actuation
Reverse duct material	Cast ASTM A356 & 5083 grade plate aluminium

Shaft Assembly:

Main Shaft Material:	Stainless Steel Grade SAF 2205
Rear Bearing:	Water Lubricated Cutlass Bearing
Main Bearing:	Spherical roller Thrust Bearing Spherical roller Bearing - Radial
Lubrication	Oil lubrication
Shaft Seal:	Face type Mechanical Seal
Coupling Flange:	GWB Series to suit application
Shaft Angle	0 degrees standard – Custom shaft angles available

Intake Body:

Material:	5083 grade plate aluminium
Inspection Opening:	Inboard
Intake Grate:	Removable Stainless Steel Bars

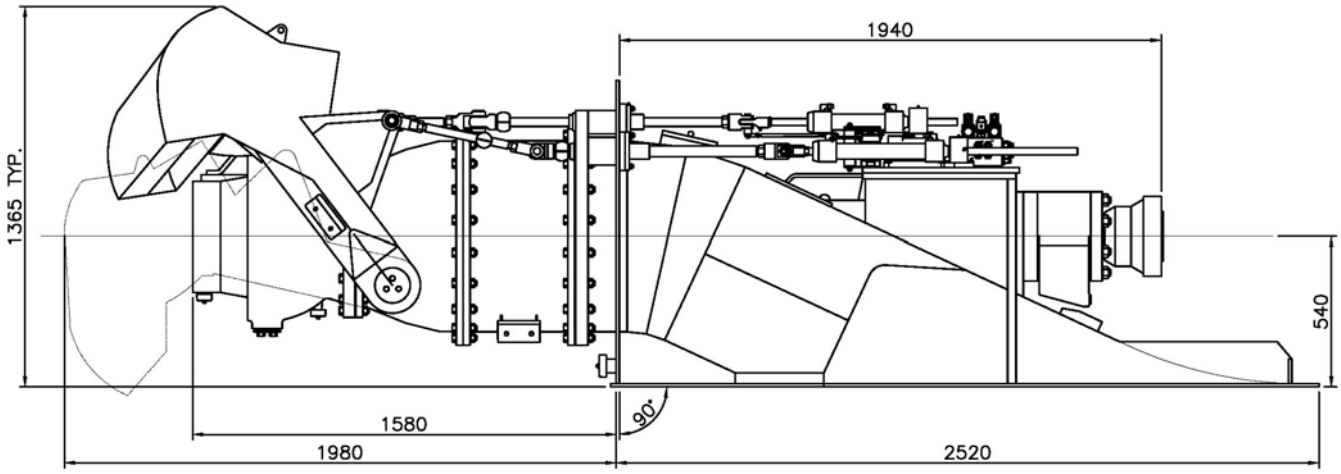

Note (A): Requires application approval by DOEN Pacific.
Due to our policy of continuous Research & Development, we reserve the right to change the specifications without notice.

H:\Commonfiles\ENGINEERING\AutoCAD\

REVISION			
ITEM No.	DESCRIPTION	BY	DATE

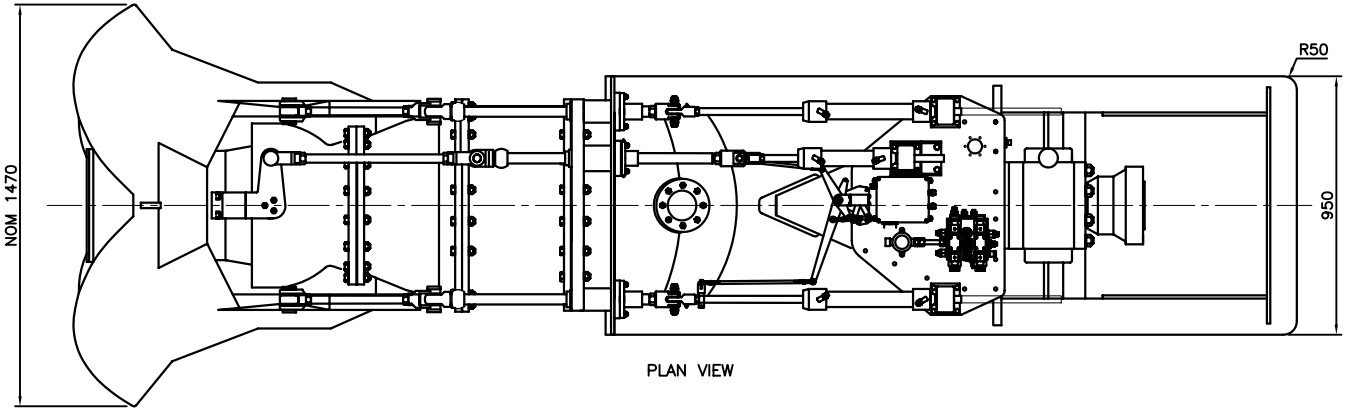

PLAN VIEW

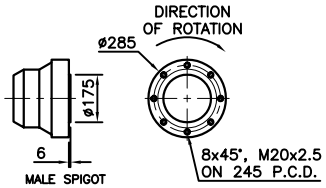

VIEW OF STANDARD DRIVE FLANGE GWB-587-60

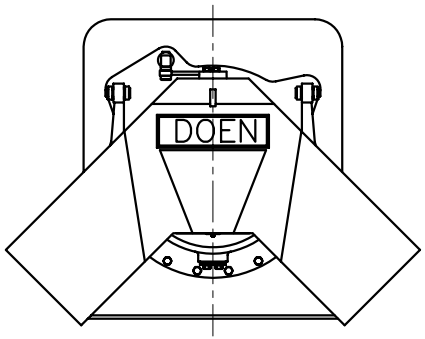

OUTBOARD VIEW

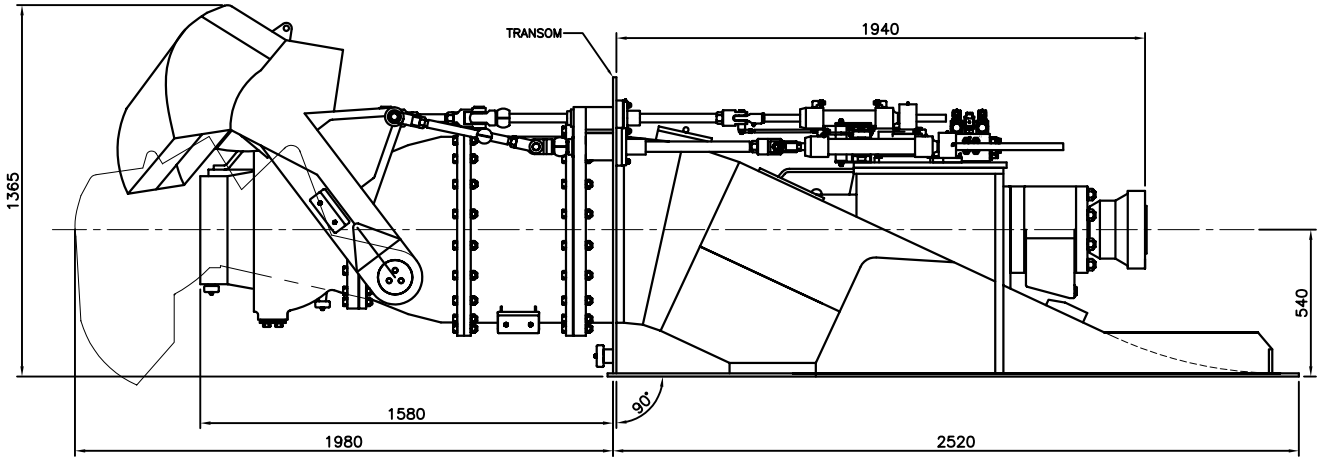

PROFILE VIEW

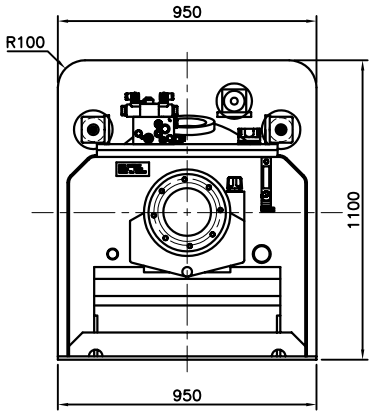

INBOARD VIEW

NOTE: DUE TO OUR POLICY OF CONTINUAL DEVELOPMENT DRAWINGS SUBJECT TO CHANGE WITHOUT NOTICE

UNLESS OTHERWISE STATED ALL DIMENSIONS IN MILLIMETRES TOLERANCES LINEAR : +/- 0.4 ANGULAR : +/- 0.5°		DRN P.PEIRIS CKD T.UDVARY	DOEN PACIFIC PTY. LTD.
	MATERIAL	APPD T.UDVARY ISSUED 25-08-06 MODELS DJ260	TITLE DJ260 GENERAL ARRANGEMENT
DRAFTING STANDARD AS 1100	FINISH		SIZE A3 DRG. No. 260-110-0000-004 SCALE NONE AS PRINTED

200 SERIES

MODEL DJ290

- Technical Specifications
- General Arrangement Drawing

Performance **Reliability** Simplicity

DJ290 TECHNICAL SPECIFICATIONS

UNIT DETAILS

Maximum Rec. Power Continuous:	Up to 2000skW (2680shp)
Maximum Rec. Power Sprint:	Up to 2400skW (3220shp) (A)
Maximum Rec Impeller speed:	1160rpm
Dry Weight:	2340 kg (complete waterjet including jet mounted hydraulic items)
Entrained Water:	710 kg
Loss of buoyancy	0.792 m^3 (duct volume within hull bound)
Corrosion Protection:	Cathodic with Anodes
Design Standard:	To international authority standards

CONSTRUCTION DETAILS

Impeller:

Diameter:	29 inch (736mm)
No of Stages/Configuration:	Single Stage – Axial pump construction
Standard Rotation:	Anti-clockwise (Looking forward from stern)
Impeller Material:	Cast CF8M Stainless Steel

Pump Assembly:

Impeller Casing Material:	AISI 316 Stainless Steel
Discharge Nozzle Material	Cast CF8M & AISI 316 Stainless Steel

Steering System:

Description	Balanced nozzle
Operation	Hydraulic with Inboard cylinder actuation
Steering Bowl/Nozzle Material:	Cast ASTM A356 Aluminium Alloy

Reverse System:

Description	Split Duct Type – “High Thrust”
Operation	Hydraulic with Dual Inboard cylinder actuation
Reverse duct material	Cast ASTM A356 & 5083 grade plate aluminium

Shaft Assembly:

Main Shaft Material:	Stainless Steel Grade SAF 2205
Rear Bearing:	Water Lubricated Cutlass Bearing
Main Bearing:	Spherical roller Thrust Bearing Spherical roller Bearing - Radial
Lubrication	Oil lubrication with circulating pump
Shaft Seal:	Face type Mechanical Seal
Coupling Flange:	GWB Series to suit application
Shaft Angle	0 degrees standard – Custom shaft angles available

Intake Body:

Material:	5083 grade plate aluminium
Inspection Opening:	Inboard
Intake Grate:	Removable Stainless Steel Bars

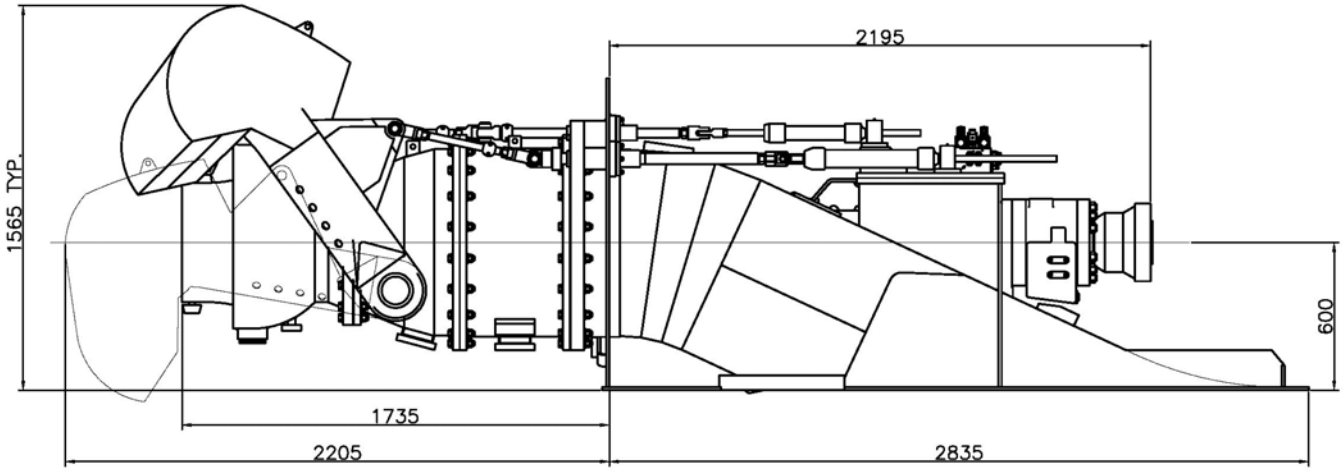

Note (A): Requires application approval by DOEN Pacific.

Due to our policy of continuous Research & Development, we reserve the right to change the specifications without notice

H:\Commonfiles\ENGINEERING\AutoCAD\

REVISION			
ITEM No.	DESCRIPTION	BY	DATE

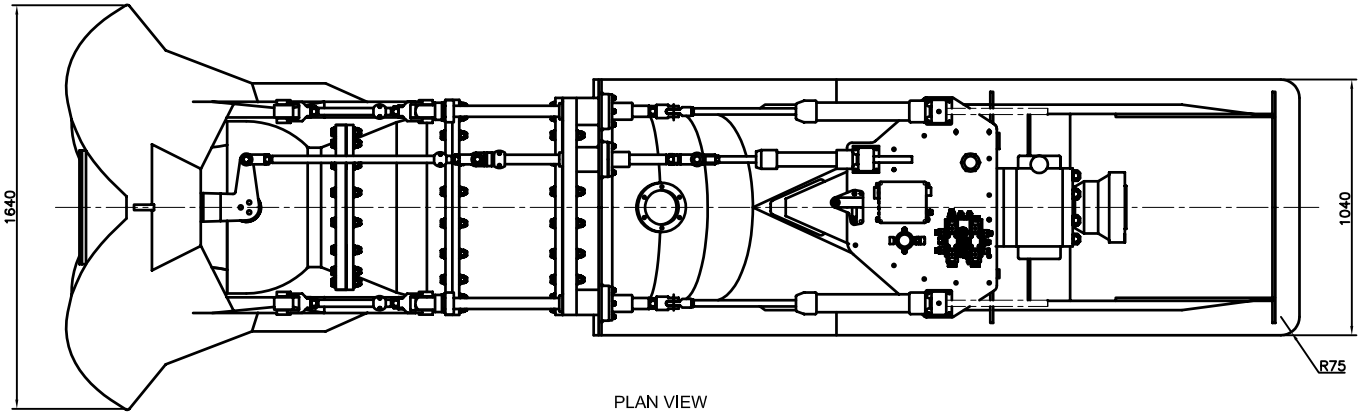

PLAN VIEW

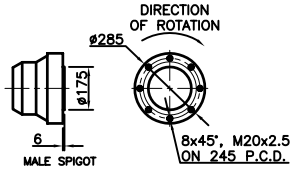

VIEW OF STANDARD DRIVE FLANGE GWB-587-60

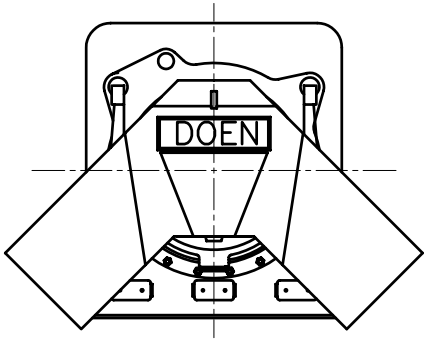

OUTBOARD VIEW

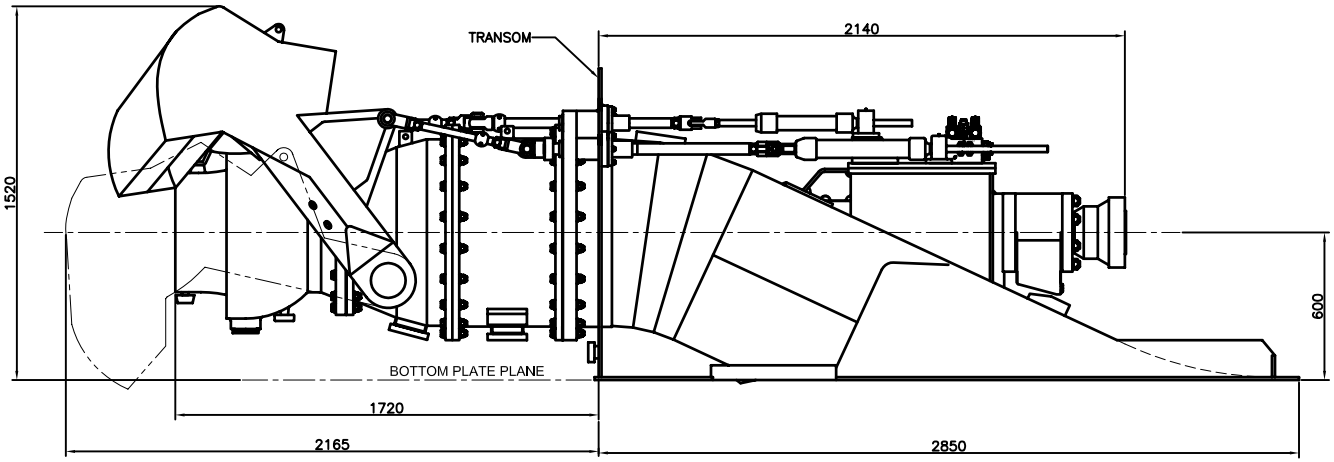

PROFILE VIEW

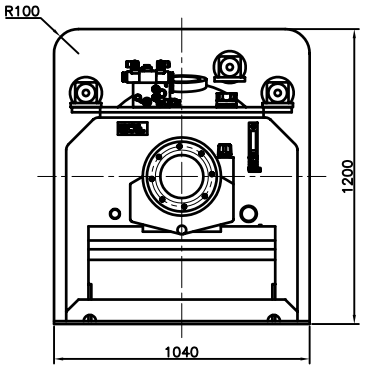

INBOARD VIEW

NOTE: DUE TO OUR POLICY OF CONTINUAL DEVELOPMENT DRAWINGS SUBJECT TO CHANGE WITHOUT NOTICE

UNLESS OTHERWISE STATED ALL DIMENSIONS IN MILLIMETRES TOLERANCES LINEAR : +/- 0.4 ANGULAR : +/- 0.5°		DRN P.PEIRIS CKD T.UDVARY	DOEN PACIFIC PTY. LTD.
	MATERIAL	APPD T.UDVARY ISSUED 21-02-08 MODELS DJ290	TITLE DJ290 GENERAL ARRANGEMENT
DRAFTING STANDARD AS 1100	FINISH		SIZE A3 DRG. No. 290-110-0000-003 SCALE NONE AS PRINTED

300 SERIES

MODEL DJ330

- Technical Specifications
- General Arrangement Drawing

Performance **Reliability** Simplicity

DJ330 TECHNICAL SPECIFICATIONS

UNIT DETAILS

Maximum Rec. Power Continuous:	Up to 2750skW (3685shp)
Maximum Rec. Power Sprint:	Up to 3090skW (4145shp)(A)
Maximum Rec Impeller speed:	1020rpm
Dry Weight:	3250 kg (complete waterjet including jet mounted hydraulic items)
Entrained Water:	1060 kg
Loss of buoyancy	1.220 m^3 (duct volume within hull bound)
Corrosion Protection:	Cathodic with Anodes
Design Standard:	To international authority standards

CONSTRUCTION DETAILS

Impeller:

Diameter:	33 inch (838mm)
No of Stages/Configuration:	Single Stage – Axial pump construction
Standard Rotation:	Anti-clockwise (Looking forward from stern)
Impeller Material:	Cast CF8M Stainless Steel

Pump Assembly:

Impeller Casing Material:	AISI 316 Stainless Steel
Discharge Nozzle Material	Cast CF8M & AISI 316 Stainless Steel

Steering System:

Description	Balanced nozzle
Operation	Hydraulic with Dual Inboard cylinder actuation
Steering Bowl/Nozzle Material:	Cast ASTM A356 Aluminium Alloy

Reverse System:

Description	Split Duct Type – “High Thrust”
Operation	Hydraulic with Dual Inboard cylinder actuation
Reverse duct material	Cast ASTM A356 & 5083 grade plate aluminium

Shaft Assembly:

Main Shaft Material:	Stainless Steel Grade SAF 2205
Rear Bearing:	Water Lubricated Cutlass Bearing
Main Bearing:	Spherical roller Thrust Bearing Spherical roller Bearing - Radial
Lubrication	Oil lubrication with circulating pump
Shaft Seal:	Face type Mechanical Seal
Coupling Flange:	GWB Series to suit application
Shaft Angle	0 degrees standard – Custom shaft angles available

Intake Body:

Material:	5083 grade plate aluminium
Inspection Opening:	Inboard
Intake Grate:	Optional

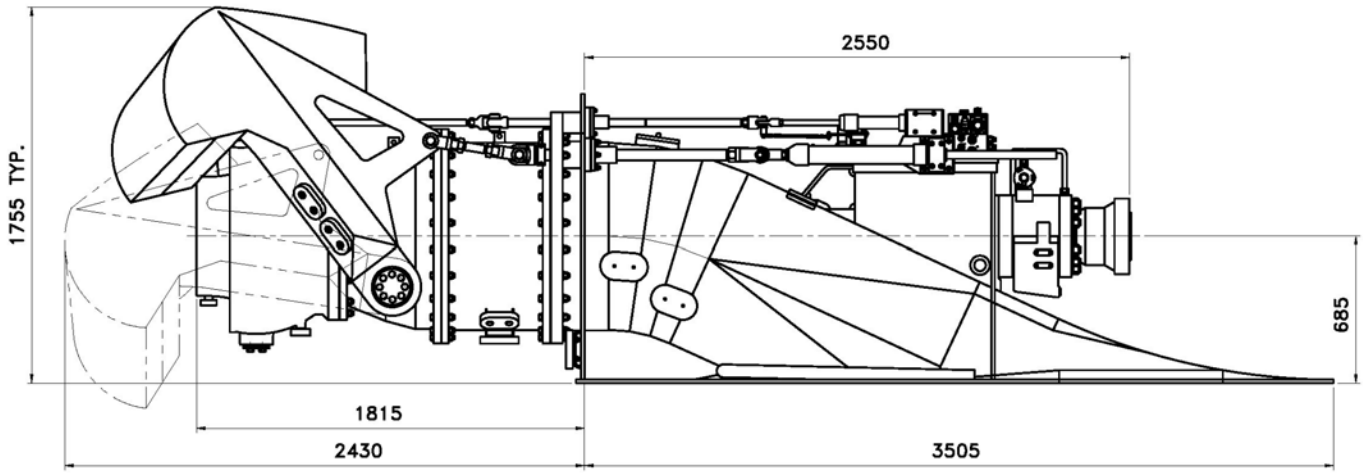

Note (A): Requires application approval by DOEN Pacific.
Due to our policy of continuous Research & Development, we reserve the right to change the specifications without notice

H:\Commonfiles\ENGINEERING\AutoCAD\

REVISION			
ITEM No.	DESCRIPTION	BY	DATE

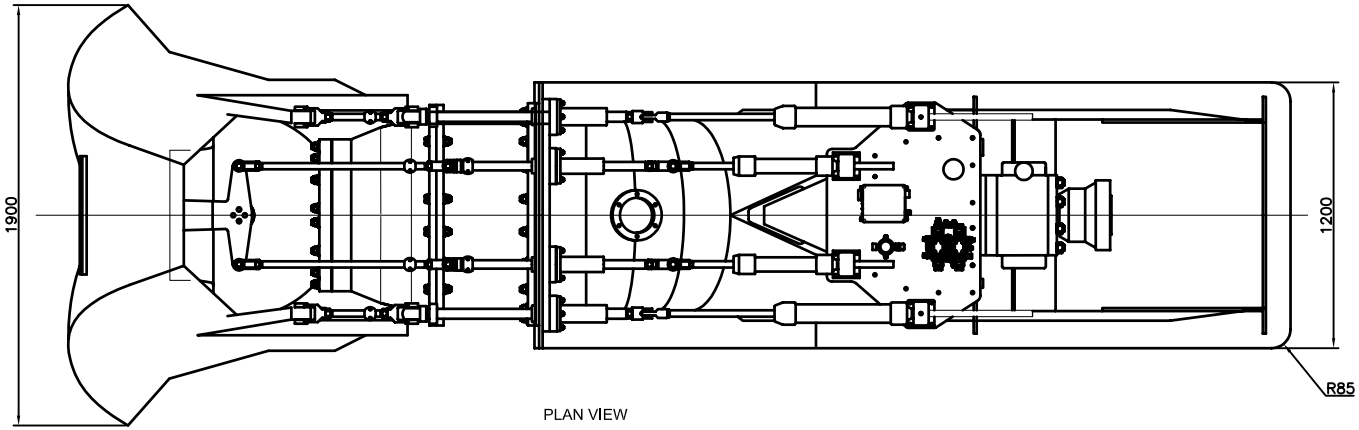

PLAN VIEW

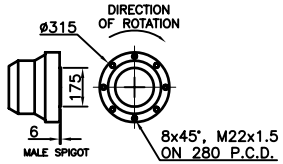

VIEW OF STANDARD DRIVE FLANGE GWB-587-60

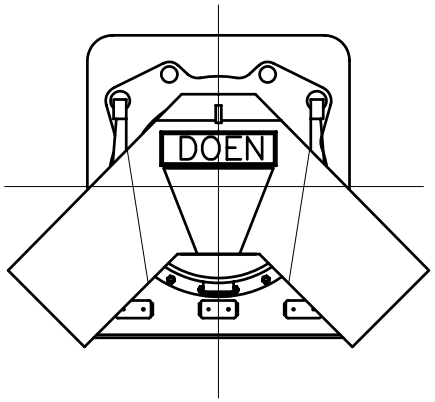

OUTBOARD VIEW

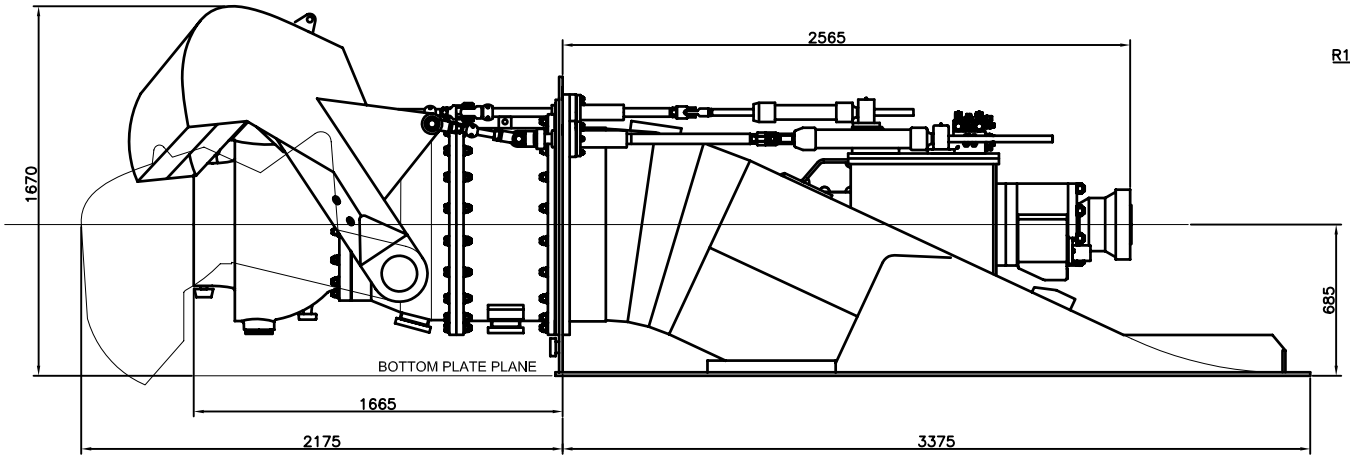

PROFILE VIEW

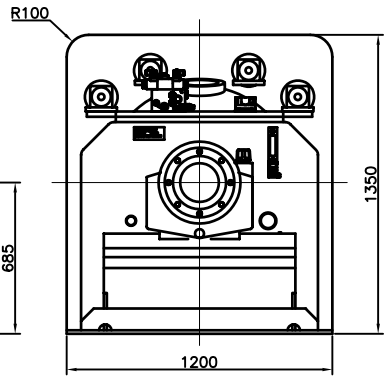

INBOARD VIEW

NOTE: DUE TO OUR POLICY OF CONTINUAL DEVELOPMENT DRAWINGS SUBJECT TO CHANGE WITHOUT NOTICE

UNLESS OTHERWISE STATED ALL DIMENSIONS IN MILLIMETRES TOLERANCES LINEAR : +/- 0.4 ANGULAR : +/- 0.5°		DRN P.PEIRIS CKD T.UDVARY	DOEN PACIFIC PTY. LTD.
	MATERIAL	APPD T.UDVARY ISSUED 1-05-2008 MODELS DJ330	TITLE DJ330 GENERAL ARRANGEMENT
DRAFTING STANDARD AS 1100	FINISH		SIZE A3 DRG. No. 330-110-0000-004 SCALE NONE AS PRINTED

300 SERIES

MODEL DJ350

- Technical Specifications
- General Arrangement Drawing

Performance **Reliability** Simplicity

DJ350 TECHNICAL SPECIFICATIONS

UNIT DETAILS

Maximum Rec. Power Continuous:	Up to 3200skW (4290shp)
Maximum Rec. Power Sprint:	Up to 4000skW (5365shp) (A)
Maximum Rec Impeller speed:	960 rpm
Dry Weight:	3650 kg (complete waterjet including jet mounted hydraulic items)
Entrained Water:	1175 kg
Loss of buoyancy:	1.380 m^3 (duct volume within hull bound)
Corrosion Protection:	Cathodic with Anodes
Design Standard:	To international authority standards

CONSTRUCTION DETAILS

Impeller:

Diameter:	35 inch (890mm)
No of Stages/Configuration:	Single Stage – Axial pump construction
Standard Rotation:	Anti-clockwise (Looking forward from stern) note: Option for Clockwise rotation
Impeller Material:	Cast CF8M Stainless Steel

Pump Assembly:

Impeller Casing Material:	AISI 316 Stainless Steel
Discharge Nozzle Material	Cast CF8M & AISI 316 Stainless Steel

Steering System:

Description	Balanced nozzle
Operation	Hydraulic with Dual Inboard cylinder actuation
Steering Bowl/Nozzle Material:	Cast ASTM A356 Aluminium Alloy

Reverse System:

Description	Split Duct Type – “High Thrust”
Operation	Hydraulic with Dual Inboard cylinder actuation
Reverse duct material	Cast ASTM A356 & 5083 grade plate aluminium

Shaft Assembly:

Main Shaft Material:	Stainless Steel Grade SAF 2205
Rear Bearing:	Water Lubricated Cutlass Bearing
Main Bearing:	Spherical roller Thrust Bearing Spherical roller Bearing - Radial
Lubrication	Oil lubrication with circulating pump
Shaft Seal:	Face type Mechanical Seal
Coupling Flange:	GWB Series to suit application
Shaft Angle	0 degrees standard – Custom shaft angles available

Intake Body:

Material:	5083 grade plate aluminium
Inspection Opening:	Inboard
Intake Grate:	Optional

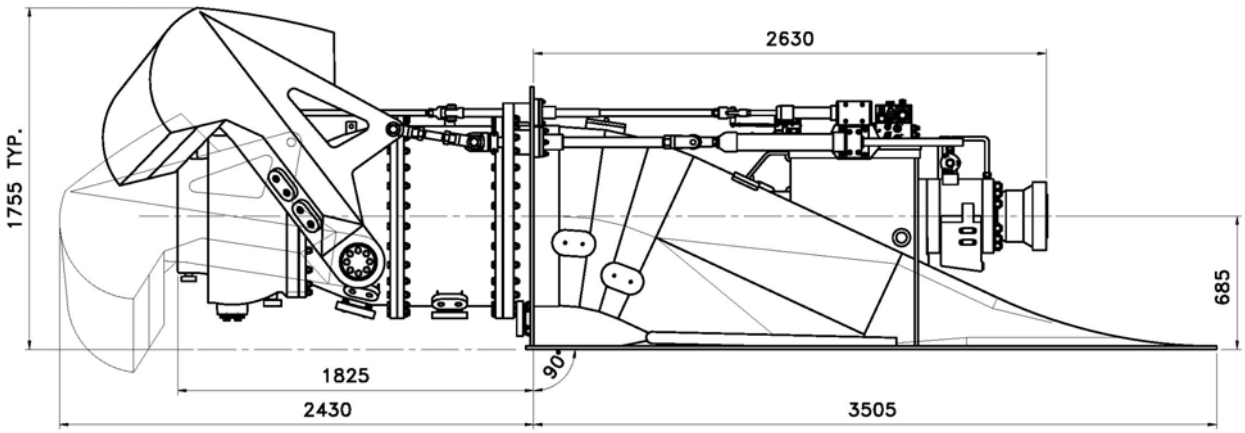

Note (A): Requires application approval by DOEN Pacific
Due to our policy of continuous Research & Development, we reserve the right to change the specifications without notice

H:\Commonfiles\ENGINEERING\AutoCAD\

REVISION			
ITEM No.	DESCRIPTION	BY	DATE

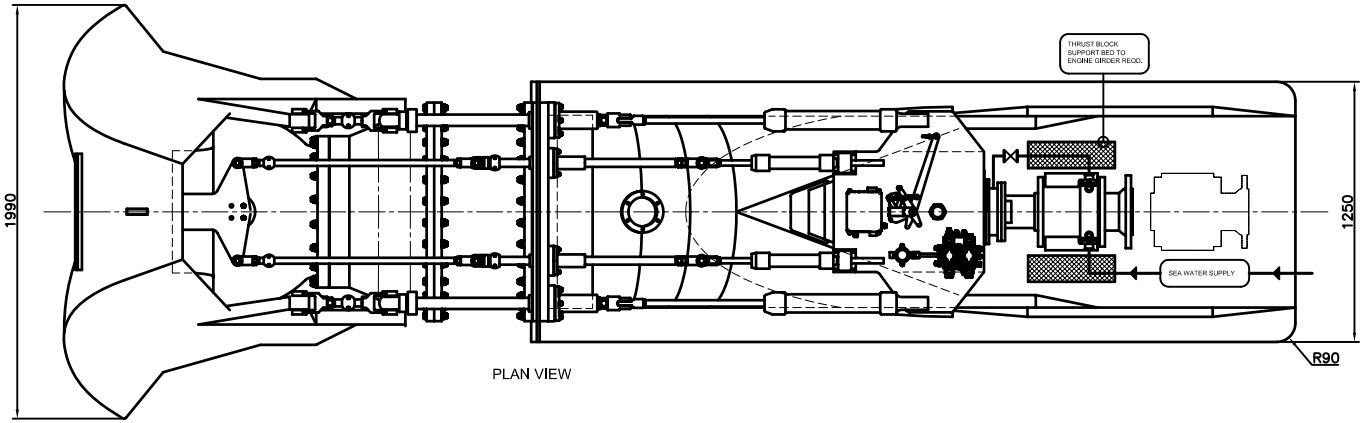

PLAN VIEW

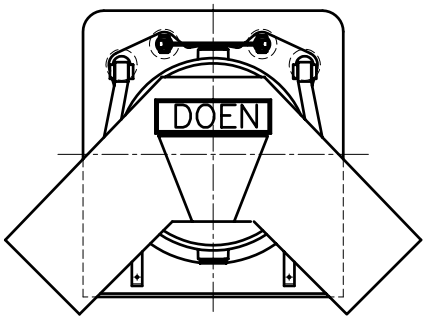

OUTBOARD VIEW

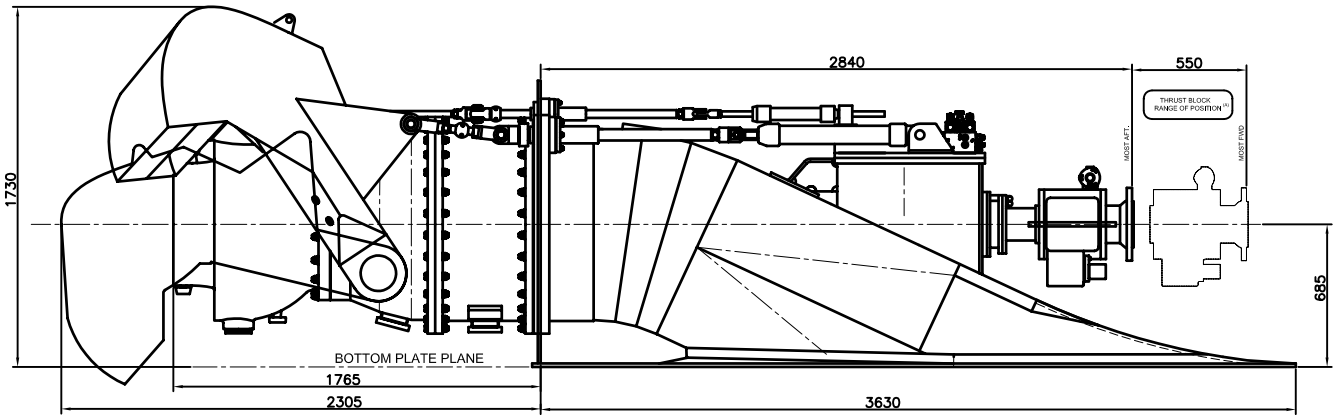

PROFILE VIEW

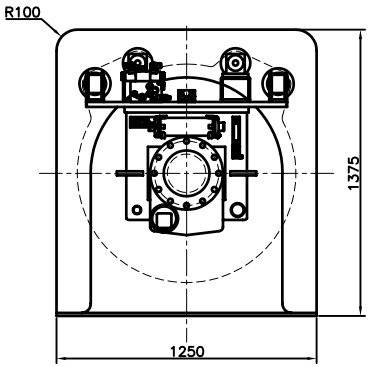

INBOARD VIEW

NOTE: DUE TO OUR POLICY OF CONTINUAL DEVELOPMENT DRAWINGS SUBJECT TO CHANGE WITHOUT NOTICE

UNLESS OTHERWISE STATED ALL DIMENSIONS IN MILLIMETRES TOLERANCES LINEAR : +/- 0.4 ANGULAR : +/- 0.5°		DRN P.PEIRIS CKD T.UDVARY	DOEN PACIFIC PTY. LTD.
	MATERIAL	APPD T.UDVARY ISSUED 30-04-2008	TITLE DJ350 GENERAL ARRANGEMENT
		MODELS DJ330	
DRAFTING STANDARD AS 1100	FINISH		SIZE A3 DRG. No. 350-110-0000-001 SCALE NONE AS PRINTED

ECS200 - Control

For 15m – 25m vessels dual main station control and twin-engine configurations

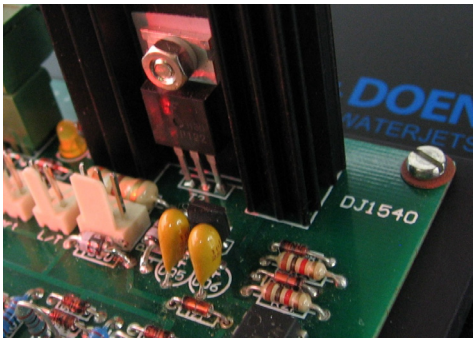

Description

ECS200 Control is a powerful dual station - twin waterjet control system. It combines waterjet reverse and steering control together with primary engine throttle and marine gear command into the one simple to operate system.

Each waterjet in the system uses separate microprocessor control units, each cross communicating by independent CAN bus lines ensuring a high level of redundancy.

Fully Class compliant, the system is complete with all necessary monitoring, alarm, back-up and emergency control functions.

Features

- **CAN BUS** technology
- Plug in cabling using Deutsch Connectors.
- Gear Panel – interlocked push button gear selection.
- Engine Sync – one lever sync of engine speed and bucket control.
- Idle override – two High Idle Selects for enhanced low speed manoeuvrability.
- Throttle Signal – available as Voltage, Current and PWM.
- Software adjustable for in field setting and fine tuning of vessel control parameters.
- Metal, watertight enclosures – using serviceable componentry.

Options

- Steering Devices – orbitrol power hydraulic OR electric follow up steering using Helm wheels, steering joysticks, “smart” jog controls.
- Autopilot interface
- Bow thruster interface
- **eDOCK** joystick control. A single joystick control that simultaneously actuates and controls waterjets and engines for precise and intuitive low speed manoeuvring control.

eDOCK joystick control

System Configuration

Twin Jet, Single Station Depicted

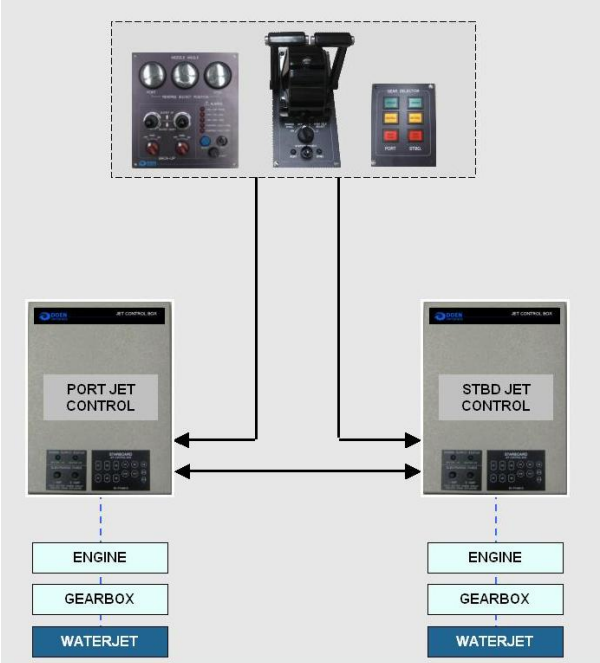

DOEN WATERJETS

33 VENTURE WAY, BRAESIDE, 3195
VICTORIA, AUSTRALIA

TEL: + 613 9587 3944
FAX: + 613 9587 3179

Email: inquiries@doen.com
Web: **www.doen.com**

DOEN WATERJETS

Electronic Control Systems

CAN BUS - Control

www.doen.com

DOEN WATER JETS

Application

Large vessels with multiple control stations and multiple engine configurations.

System Configuration

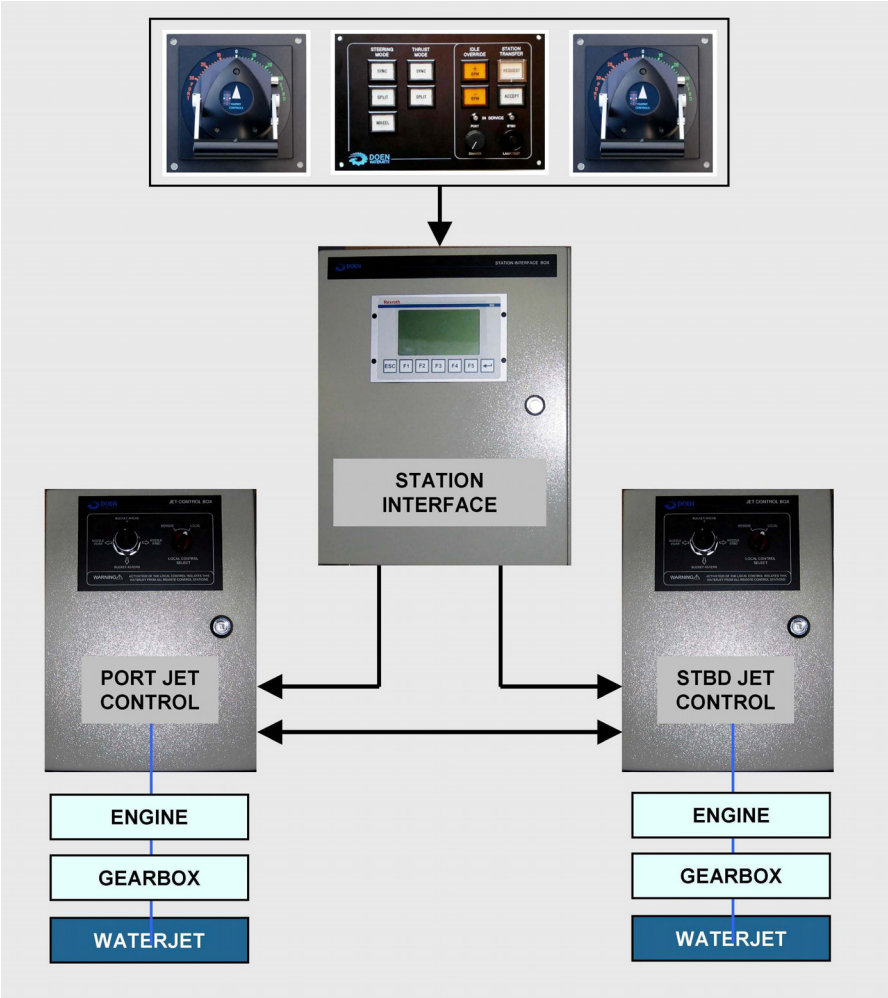

Twin System Depicted
Simplified schematic

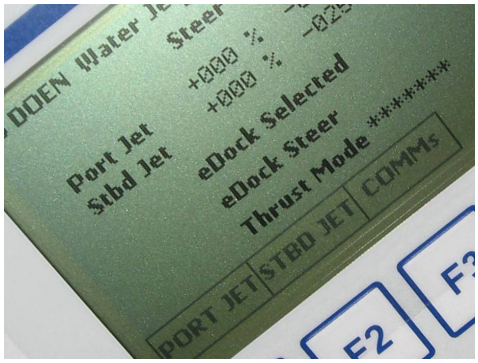

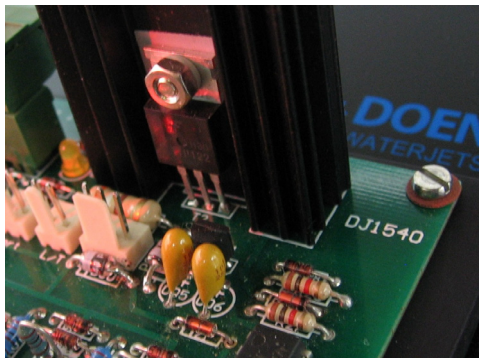

Description

CAN BUS Control is a powerful multi-station, multi-waterjet control system for propulsion control of large vessels with DOEN 200series and 300series waterjets.

The **CAN BUS Control** puts you in complete control, combining waterjet steering and reverse control together with primary engine throttle and marine gear command into the one simple to operate system.

Each waterjet and station node throughout the system uses separate microprocessor control units, each with two independent CAN bus lines ensuring a high level of redundancy.

Fully Class compliant, the system is complete with all necessary monitoring, alarm, back-up and emergency control functions.

Features

- **CAN BUS** technology
- Plug in cabling using Deutsch Connectors.
- LCD Display – for detailed and complete system status as well as alarm history.
- Control Modes – push button selection for sync, split control and steering modes.
- Gear Panel – interlocked push button gear selection.
- Engine Sync – one lever sync of engine speed and bucket control.
- Idle override – push button idle ramping up for enhanced low speed manoeuvrability.
- Throttle Signal – available as Voltage, Current and PWM.
- Software adjustable for in field setting and fine tuning of vessel control parameters.
- Metal, watertight enclosures – using serviceable componentry.

Options

- Alternative Control Levers – Rotary lever heads providing bucket, throttle and steering in the one unit.
- Alternative Steering Devices – including Helm wheels, steering joysticks and “smart” jog controls.
- **eDOCK** joystick control – A single joystick control that simultaneously actuates and controls waterjets and engines for precise and intuitive low speed manoeuvring control.
- Autopilot interface
- Bow thruster interface
- Dynamic Position Interfacing

eDOCK joystick control

Featured Vessels:
33metre Crew Boat – 3x DJ290
44metre H2OMEMotor Yacht – 2x DJ290 + 1x DJ350B

ISSUED 080411

DOEN WATERJETS
33 VENTURE WAY
BRAESIDE, 3195
VICTORIA, AUSTRALIA

TEL: + 613 9587 3944
FAX: + 613 9587 3179

Email: inquiries@doen.com
Web: www.doen.com

DISTRIBUTOR

Performance Reliability Simplicity

DOEN WATER JETS

200 SERIES

CASE STUDIES (References)

Performance **Reliability** Simplicity

DJ260-DT Waterjet

Performance **Reliability** Simplicity

Case Study 300: **29m Patrol Vessel**

SPECIFICATIONS

Waterjet:	**DJ260-DT x2**
Engine:	**MAN D2862 LE463** **1400hp @ 2100 rpm**
Gearbox:	**ZF3050 2.240:1**
Vessel:	**28.85m L.O.A** **23.42m W.L.L** **65t (light) - 80t (laden)**
Performance:	**30+ knots (light)**

Indonesian Navy – 28.85m Patrol boat, (Indonesia)

P.T Palindo in Batam, Indonesia has built these 28.85m patrol boats for Coastal Patrol duties by the Indonesian Navy. Powered by twin MAN D2862 LE463 marine diesels coupled to **DOEN DJ260-DT** waterjets these vessels have a maximum speed of more than 30knots and are designed to cruise at around 23knots.

With a focus on maximum service life and ease of maintenance **DJ260-DT**, Direct Thrust, waterjets have been specified. These units have all stainless steel pump assemblies, for maximum corrosion resistance and life in service. Each is fitted with 26" (660mm) high volume single stage axial flow impellers. Furthermore the Direct Thrust (DT) configuration greatly simplifies the shaft line arrangement by making use of the marine gearboxes own thrust bearing eliminates the need for an additional and separate thrust bearing on the waterjet itself. This results in the very minimum of rotating parts and virtually eliminates routine ongoing maintenance of the shaft line compared to conventional waterjets.

Each **DJ260-DT** has its own fully integrated hydraulic system providing steering and reverse control. All of the hydraulic equipment including steering and reverse cylinders and associated hose connections are inboard mounted. The hydraulic pumps are directly driven from the gearbox PTO's.

Vessel propulsion control is managed using Doen's own **ECS200 – Electronic Control** system. Configured for twin engine - single station; the system simply combines primary control of engine throttle and gear command with the waterjet steering and reverse functions. Additionally this system provides the operator with indication, monitoring and alarm information using a full color LCD screen with soft buttons. Back-up steering and reverse control functions are provided at both the main control station, and locally at the waterjets.

DOEN PACIFIC PTY. LTD.
33 Venture Way Braeside 3195
Victoria, Australia

Tel: +61 3 9587 3944
Fax: +61 3 9587 3179
Email: inquiries@doen.com

DJ200-IWJ Waterjet

Performance **Reliability** Simplicity

Case Study 298: **23m Immediate Support Vessel**

SPECIFICATIONS

Waterjet:	**DJ200-IWJ x2**
Engine:	**CAT C32 ACERT** **1600hp @ 2300 rpm**
Gearbox:	**WVS430/1 1.485:1**
Vessel:	**22.70m L.O.A** **18.00m W.L.L** **38t (light) - 45t (laden)**
Performance:	**40 knots (light)**

Indian Navy – 23m Immediate Support Vessel,

SHM Shipcare of Mumbai, India has built fourteen of these 23m Immediate Support Vessels (ISV) for operation by the Indian Navy undertaking asset patrol and surveillance operations for the Indian Oil and Natural Gas Corporation. Constructed in fiberglass and powered by twin CAT C32 ACERT marine diesels coupled to **DOEN DJ200-IWJ** waterjets these vessels have a maximum speed of 40knots and are designed to cruise at around 30knots.

The Doen Integrated Water Jet (IWJ) installation method provides a simple and extremely cost effective method for waterjet installation in fiberglass vessels as it allows the waterjet intake ducting to be laminated with the vessel hull form itself. To simplify the mechanical complexity and to further reduce the installed cost, the waterjet shaft is arranged to thrust directly to the gearbox as per conventional propeller arrangement. Fitted with 520mm single stage high performance axial flow impellers; these waterjets deliver excellent high-speed efficiency with superior cavitation margins and efficiency at lower speeds and cruise conditions.

The waterjets have their own fully integrated hydraulic system providing steering and reverse control. All of the hydraulic equipment including steering and reverse cylinders and associated hose connections are inboard mounted. The hydraulic pumps are directly driven from the gearbox PTO's.

Vessel propulsion control is managed using Doen's own **ECS200 – Electronic Control** system. Configured for twin engine - single station; the system simply combines primary control of engine throttle and gear command with the waterjet steering and reverse functions. Additionally this system provides the operator with indication, monitoring and alarm information using a full color LCD screen with soft buttons. Back-up steering and reverse control functions are provided at both the main control station, and locally at the waterjets.

DOEN PACIFIC PTY. LTD.
33 Venture Way Braeside 3195
Victoria, Australia

Tel: +61 3 9587 3944
Fax: +61 3 9587 3179
Email: inquiries@doen.com

DJ290 Waterjet

Performance **Reliability** Simplicity

Case Study 294: **45m Crew Boat**

SPECIFICATIONS

Waterjet:	**DJ290 x4**
Engine:	**CAT C32 ACERT** **1450 bhp @ 2100 rpm**
Gearbox:	**MGX 6620SC 2.44:1**
Vessel:	**45.0m L.O.A** **42.0m W.L.L** **160t (light) - 385t (laden)**
Performance:	**30+ knots (light)**

Petrobras P3 – 45m Fast Crewboat and Oilfield Support Vessel, (Brazil)

This 45.0m crewboat, designed by Incat Crowther and built by Arpoador in Brazil, will transport 60 crew and cargo at a maximum displacement of 385t. Powered by quad Caterpillar C32 Acert marine diesels this latest vessel will set new standards in terms of performance, maneuverability at greatly reduced noise+vibration levels.

For maximum service life in this arduous commercial application the **DJ290** waterjets have been specified with stainless steel pump assemblies fitted with 29" (737mm) high volume single stage axial flow impellers. These waterjets provide excellent high-speed efficiency with superior cavitation margins allowing full power application at any load condition and also at zero speed for maximum possible thrust during docking and station keeping maneuvers at sea. Doen's pre-fabricated aluminium intake duct installation combines maximum vessel integrity with simple installation.

Each **DJ290** has its own fully integrated hydraulic system providing steering and reverse control. All of the hydraulic equipment including cylinders hydraulic and associated hose connections are inboard mounted. All hydraulic pumps are directly driven from the gearbox PTO's.

Vessel propulsion control is managed using Doen's own **CAN BUS - Control** system. Configured for quad engine - twin station; the system simply combines primary control of engine throttle and gear command with the waterjet steering and reverse functions. Additionally the system provides the operator with all necessary monitoring, alarm and back-up control functions.
The second (rear facing) station has been fitted with Doen's **eDOCK** joystick control system. This provides a single joystick lever control that simultaneously actuates and controls waterjets and engines for precise and intuitive low speed maneuvering control.

The waterjets and control system are supplied to **RINA** ✠ HSC(A) MON special crew boat**.**

DOEN PACIFIC PTY. LTD.
33 Venture Way Braeside 3195
Victoria, Australia

Tel: +61 3 9587 3944
Fax: +61 3 9587 3179
Email: inquiries@doen.com

www.doen.com

DJ260 Waterjet

Performance **Reliability** Simplicity

Case Study 290: **33m Passenger Ferry**

SPECIFICATIONS

Waterjet:	**DJ260 x2**
Engine:	**MTU 12V2000 M72** **1080 kW @ 2250 rpm**
Gearbox:	**ZF4540 2.333:1**
Vessel:	**33m L.O.A** **30.6m W.L.L** **90 tonne**
Performance:	**30 knots**

Wang Tak Engineering – 33m Fast Passenger Ferry (China)

Two of these 33.0m aluminium catamaran ferries have been constructed by Wang Tak's shipyard in Guangdong Province to Chinese Classification Society rules. Powered by twin MTU V12 marine diesels coupled to the **DOEN DJ260** waterjets, this vessel has an operational speed of 28knots and can carry upwards of 243 passengers.

For this project the **DJ260** waterjets have been specified with all stainless steel pump assemblies. Fitted with 26" (660mm) single stage high performance axial flow impellers; these waterjets provide excellent high-speed efficiency with superior cavitation margins at lower speeds and cruise conditions. Doen's pre-fabricated aluminium intake design made it possible to customise the inlet ducting and shaft line so as to facilitate waterjet installation into the unusual hull form without any compromise to the vessels' or waterjets performance.

Each **DJ260** has its own fully integrated hydraulic system providing steering and reverse control. All of the hydraulic equipment including cylinders hydraulic and associated hose connections are inboard mounted. Each hydraulic pump is directly driven from the gearbox PTO's.

The vessel propulsion control is managed using Doen's own **CAN BUS - Control** system. Configured for twin engine - single station, the system uses twin Rotary Speed Control Units (Kwant) as the primary control device for control of engine throttle, waterjet steering and reverse functions. In seat Captain and Coxswain steering tillers are also provided. Split or combined control modes are selectable for precise and intuitive control at high speed, low speed, close quarter maneuvering and docking. Additionally the system provides the operator with gear command and all necessary monitoring, alarm and back-up control functions.

The waterjets and control system are supplied to **CCS** ★ CSA CATAMARAN HSC PASSENGER.

DOEN PACIFIC PTY. LTD.
33 Venture Way Braeside 3195
Victoria, Australia

Tel: +61 3 9587 3944
Fax: +61 3 9587 3179
Email: inquiries@doen.com

www.doen.com

DJ290 Waterjet

Performance **Reliability** Simplicity

Case Study 284: **35m Crew Boat**

SPECIFICATIONS

Waterjet:	**DJ290 x3**
Engine:	**CAT C32 ACERT** **1450 bhp @ 2300 rpm**
Gearbox:	**ZF 3050 2.773:1**
Vessel:	**35.5m L.O.A** **32.7m LWL** **115t (light) – 195t (laden)**
Performance:	**29 knots (light)**

Petrobras P2 – 35m Crew and Support Vessel, Brazil

This 35m Aluminium constructed Crew Boat has been built by Mistral Marine in conjunction with MCP yachts in Brazil. It is powered by triple CAT C32 ACERT diesel engine coupled to **DOEN DJ290** waterjets. Designed for Petrobras P2 crew boat spec, this vessel provides 70 passenger capacity with 80 DWT deck cargo capacity.

For maximum service life in this arduous commercial application the **DJ290** waterjets have been specified with stainless steel pump assemblies fitted with 29" (737mm) high volume single stage axial flow impellers. These waterjets provide excellent high-speed efficiency with superior cavitation margins allowing full power application at any load condition and also at zero speed for maximum possible thrust during docking and station keeping maneuvers at sea. Doen's pre-fabricated aluminium intake duct installation combines maximum vessel integrity with simple installation.

Each **DJ290** has its own fully integrated hydraulic system providing steering and reverse control. All of the hydraulic equipment including cylinders hydraulic and associated hose connections are inboard. Mounted. The hydraulic oil reservoirs themselves are integrated with the waterjet ducting providing passive cooling and compact packaging. All hydraulic pumps are directly driven from gearbox PTO's.

Vessel propulsion control is managed using Doen's own **CAN BUS - Control** system. Configured for triple engine - twin station; the system simply combines primary control of engine throttle and gear command with the waterjet steering and reverse functions. Additionally the system provides the operator with all necessary monitoring, alarm and back-up control functions.
The second (rear facing) station has been fitted with Doen's **eDock** joystick control system. This provides a single joystick lever control that simultaneously actuates and controls waterjets and engines for precise and intuitive low speed maneuvering control

DOEN PACIFIC PTY. LTD.
33 Venture Way Braeside 3195
Victoria, Australia

Tel: +61 3 9587 3944
Fax: +61 3 9587 3179
Email: inquiries@doen.com

www.doen.com

DJ220 Waterjet

Performance **Reliability** Simplicity

Case Study 277: **20m Fast Patrol Boat**

SPECIFICATIONS

Waterjet:	**DJ220 x2**
Engine:	**MAN V12-1360** **1360 mhp @ 2300 rpm**
Gearbox:	**MGX 6620SC 1.73:1**
Vessel:	**20.1m L.O.A** **16.6m W.L.L** **38 tonne**
Performance:	**38 knots**

Marine Parks Waterjet Air Rider Hull – 20m Fast Patrol Boat

This vessel is currently the largest Air Rider Design hull from Global Marine Design. Built under Survey in Malaysia for the Marine Parks Department, this 20.0m fast patrol boat is powered by twin MAN V12 1360 diesel engines coupled to the **DOEN DJ220** waterjets. With a top speed of 38knots she has proven herself to be a very capable and fast patrol boat with excellent acceleration and sea keeping in all weather conditions.

The project called for only stainless steel waterjets and the **DJ220** waterjets are subsequently specified with all stainless steel pump assemblies. Fitted with 22" (560mm) single stage high performance axial flow impellers; these waterjets deliver excellent high-speed efficiency with superior cavitation margins and efficiency at lower speeds and cruise conditions. Doen's pre-fabricated aluminium intake design made it possible to customise the inlet ducting and shaft line so as to facilitate waterjet installation into the unusual hull form without any compromise to the vessels' or waterjets performance.

The fully integrated hydraulic system operates the waterjet reverse and steering functions. Twin PTO driven hydraulic pumps supply the tank mounted control valve bank with all reverse and steering cylinders and hydraulic lines completely mounted inboard.

The vessel is fitted with Doen's **ECS-200** Control System. Configured for twin engine - twin station; this electronic control system provides primary control of engine throttle and gear command with the waterjet steering and reverse functions. Twin levers providing combined bucket and throttle control with steering by conventional helm wheel. Additionally the system provides the operator with all necessary monitoring, alarm and back-up control functions.

DOEN PACIFIC PTY. LTD.
33 Venture Way Braeside 3195
Victoria, Australia

Tel: +61 3 9587 3944
Fax: +61 3 9587 3179
Email: inquiries@doen.com

www.doen.com

DJ220-IWJ Waterjet

Performance **Reliability** Simplicity

Case Study 271: **23m Catamaran Crew Boat**

SPECIFICATIONS

Waterjet:	**DJ220-IWJ x2**
Engine:	**VOLVO D16MH** **751 mhp @ 1900 rpm**
Gearbox:	**ZF665 - 1.743:1**
Vessel:	**23.0m L.O.A** **21.8m W.L.L** **85 t (laden)**
Performance:	**20 knots**

Petrobras Oil and Gas Crewboat – 23m Catamaran, Brazil

Built to transfer crew and equipment to oil the platforms, this fiberglass catamaran operates under charter to Petrobras Brazils largets oil company. The vessel is powered by twin Volvo diesel engines which are coupled to Doen's latest **DJ220-IWJ** (Integrated Waterjets) in this heavy displacement vessel. With a top speed of 20 knots the waterjets provide enhanced maneuverability and most importantly diver safety when operating in the vicinity of the rigs.

The Doen IWJ installation method provides a simple and extremely cost effective method for waterjet installation in fiberglass vessels as it allows the waterjet intake ducting to be laminated with the vessel hull form itself. To simplify the mechanical complexity and to further reduce the installed cost, the waterjet shaft is arranged to thrust directly to the gearbox as per conventional propeller arrangement. These **DJ220-IWJ** have all stainless steel pump assemblies. Fitted with 22" (560mm) single stage high performance axial flow impellers; these waterjets deliver excellent thrust and cruise efficiency.

Steering is by conventional helm using a power assisted hydraulic steering system. Inboard cylinders are mechanically connected to the waterjets inboard steering tiller. This provides the vessel with exceptional and easy control at all speeds

The **DJ220-IWJ** waterjets are fitted with Doen's Rotary Servo Control (RSC) unit; which is a mechanical follow up hydraulic control system providing simple and exact control of the waterjets reverse buckets. The fully integrated hydraulic system uses Pto. mounted hydraulic pumps, in built oil cooling and completely inboard mounted reverse cylinders and hydraulic lines. Reverse operation is by Hynautic control levers.

DOEN PACIFIC PTY. LTD.
33 Venture Way Braeside 3195
Victoria, Australia

Tel: +61 3 9587 3944
Fax: +61 3 9587 3179
Email: inquiries@doen.com

DJ290 + DJ350 Waterjet

Performance **Reliability** Simplicity

Case Study 263: **44m Motor Yacht**

SPECIFICATIONS

Waterjet:	**DJ290 x2 + DJ350B x1**
Wing Engine:	**CAT C32 ACERT x2** **1343 kW @ 2,300 rpm**
Cntr Engine:	**Vericor TF50 GT x1** **3590 kW @ 16,000 rpm**
Vessel:	**44.0m L.O.A** **39.7m W.L.L** **200t (laden)**
Performance:	**36 knots**

44m High Speed Motor Yacht – Italy

This unique vessel was configured with triple waterjets to provide both long range cruise performance and high-speed sprint capability. Running on two CAT C32 wing engines and **DOEN DJ290** waterjets, the vessel can cruise at up to 20knots and travel up to 1000 nautical miles. The central **DOEN DJ350** booster jet and gas turbine can be engaged for high speed running. With all engines running this vessel can travel at speeds up to 36knots. The wave piercing bow form and extreme length to beam ratio provides excellent sea keeping allows high speeds to be sustained in even very rough weather conditions.

Both the **DJ290** and **DJ350** waterjets have been specified with stainless steel pump assemblies fitted with high volume single stage axial flow impellers. These waterjets provide excellent high-speed efficiency with superior cavitation margins at lower speeds and cruise conditions. Doen's pre-fabricated aluminium intake duct installation combines maximum vessel integrity with simple installation.

Each **DJ290** has its own fully integrated hydraulic system providing steering and reverse control. All of the hydraulic equipment including cylinders hydraulic and associated hose connections are inboard mounted. All hydraulic pumps are directly driven from the gearbox PTO's.

Vessel propulsion control is managed using Doen's own **CAN BUS - Control** system configured for twin engine - twin station. The main station uses twin Rotary Speed Control Units (Kwant) for control of engine throttle, waterjet steering and reverse functions. The Second station is fitted Doen's **eDock** joystick control system. This provides a single joystick lever control that simultaneously actuates and controls waterjets and engines for precise and intuitive low speed maneuvering control.

The waterjets and control system are supplied to **RINA** C ✠ Hull • Mach Ych (MCA)**.**

DOEN PACIFIC PTY. LTD.
33 Venture Way Braeside 3195
Victoria, Australia

Tel: +61 3 9587 3944
Fax: +61 3 9587 3179
Email: inquiries@doen.com

www.doen.com

DJ260 Waterjet

Performance **Reliability** Simplicity

Case Study 258: **35m Motor Yacht**

SPECIFICATIONS

Waterjet:	**DJ260 x3**
Engine:	**CAT C32 ACERT** **1670 bhp @ 2300 rpm**
Gearbox:	**MG 6599SC 2.04:1**
Vessel:	**35.3m L.O.A** **34.0m W.L.L** **108 tonne**
Performance:	**35 knots**

Shama Yachts Egypt – 35m Luxury Motor Yacht

Founded in 1994 in Egypt, Shama Yachts builds luxury fiberglass motor yachts up to 36.0 metres in length. This vessel model is known as “116 OPEN” and is powered by triple Caterpiller C32 diesel engines coupled to the **DOEN DJ260** waterjets. The waterjets are configured as two steering and reversing wing waterjets with a central booster waterjet. With all three engines running the vessel has a top speed of in excess of 35knots. Running on the wing engines only she is able to sustain a long range cruise at up to 18knots.

The **DJ260** waterjets have been specified with stainless steel pump assemblies fitted with high volume single stage axial flow impellers. These waterjets provide excellent high-speed efficiency with superior cavitation margins at lower speeds and cruise conditions. Doen’s pre-fabricated aluminium intake ducts were provided in a bolt in format for simple installation into the fiberglass vessel hull.

Each of the wing **DJ260** waterjets has its own fully integrated hydraulic system providing steering and reverse control. All of the hydraulic equipment including cylinders hydraulic and associated hose connections are inboard. Mounted. The hydraulic oil reservoirs themselves are integrated with the waterjet ducting providing passive cooling and compact packaging. All hydraulic pumps are directly driven from gearbox PTO’s.

Vessel propulsion control is managed using Doen’s own **CAN BUS - Control** system. Configured for triple engine - twin station; the system simply combines primary control of engine throttle and gear command with the waterjet steering and reverse functions. Additionally the system provides the operator with all necessary monitoring, alarm and back-up control functions.

DOEN PACIFIC PTY. LTD.
33 Venture Way Braeside 3195
Victoria, Australia

Tel: +61 3 9587 3944
Fax: +61 3 9587 3179
Email: inquiries@doen.com

www.doen.com

DJ260 Waterjet

Performance **Reliability** Simplicity

Case Study 254: **26m Ambulance Catamaran**

SPECIFICATIONS

Waterjet:	**DJ260x2**
Engine:	**MTU 12V2000 M91** **1119bkW @ 2350 rpm**
Gearbox:	**ZF 2550 2.462:1**
Vessel:	**26.0m L.O.A** **24.8m W.L.L** **74 tonne**
Performance:	**28 knots**

Malaysian Marine Department – 26m High Speed Catamaran

Four vessels of this type were recently constructed for the Malaysian Marine Department to provide Patrol and Rescue services in Coastal regions. Designed by Mark Ellis and built by Kay Marine in Malaysia this purpose built vessel has a very low draft of only 1.10m allowing it to navigate in shallow waterways. The vessel is powered by twin 2000 series MTU V12 marine diesel engines, with ZF marine gears coupled to the **DOEN DJ260** waterjets.

For this project the **DJ260** waterjets have been specified with all stainless steel pump assemblies. Fitted with 26” (660mm) single stage high performance axial flow impellers; these waterjets provide excellent high-speed efficiency with superior cavitation margins at lower speeds and cruise conditions. Doen’s pre-fabricated aluminium intake design made it possible to customise the inlet ducting and shaft line so as to facilitate waterjet installation into the unusual hull form without any compromise to the vessels’ or waterjets performance.

The fully integrated hydraulic system operates the waterjet reverse and steering functions. Twin PTO driven hydraulic pumps supply the tank mounted control valve bank with all reverse and steering cylinders and hydraulic lines completely mounted inboard.

The vessel is fitted with Doen’s **ECS-200** Control System. Configured for twin engine single station; this electronic control system provides primary control of engine throttle and gear command with the waterjet steering and reverse functions. Twin levers providing combined bucket and throttle control with steering by conventional helm wheel. Additionally the system provides the operator with all necessary monitoring, alarm and back-up control functions.

The waterjets and control system were supplied to **Bureau Veritas** 1+ HULL. MACH.

DOEN PACIFIC PTY. LTD.
33 Venture Way Braeside 3195
Victoria, Australia

Tel: +61 3 9587 3944
Fax: +61 3 9587 3179
Email: inquiries@doen.com

www.doen.com

DJ220 Waterjet

Performance **Reliability** Simplicity

Case Study 247: **18m Catamaran Crew Boat**

SPECIFICATIONS

Waterjet:	**DJ220 x2**
Engine:	**CAT C18** **507 kW @ 2100 rpm**
Gearbox:	**ZF 550, 2.00:1**
Vessel:	**18.15m L.O.A** **17.25m W.L.L** **34 t (laden)**
Performance:	**28 knots (laden)**

High Speed Catamaran Crew Boat – Caspian Sea Kazakhstan

Five vessels of this class are operating from the home port of Aktau in Kazakhstan, ferrying crew and supplies to oil rigs in the Caspian Sea. Powered by twin CAT C18 diesel engines coupled to the **DOEN DJ220** waterjets these vessels have a top speed of more than 30knots light. The waterjets also provide these vessels with outstanding maneuverability and control, essential for working in and around the oil rigs.

For maximum service life in this arduous commercial application the **DJ220** waterjets have been specified with stainless steel pump assemblies fitted with 22" (560mm) high volume single stage axial flow impellers. These waterjets provide excellent high-speed efficiency with superior cavitation margins allowing full power application at any load condition and also at zero speed for maximum possible thrust during docking and station keeping maneuvers at sea. Doen's pre-fabricated aluminium intake duct installation combines maximum vessel integrity with simple installation.

The fully integrated hydraulic system operates the waterjet reverse and steering functions. Twin PTO driven hydraulic pumps supply the tank mounted control valve bank with all reverse and steering cylinders and hydraulic lines completely mounted inboard.

The vessel is fitted with Doen's **ECS-200** Control System. Configured for twin engine - triple station (main + 2x docking stations); this electronic control system provides primary control of engine throttle and gear command with the waterjet steering and reverse functions. Twin levers providing combined bucket and throttle control with steering by conventional helm wheel. Additionally the system provides the operator with all necessary monitoring, alarm and back-up control functions.

The waterjets and control system were supplied to **Lloyds** +100A1 SSC WORK BOAT HSC (UMS)

DOEN PACIFIC PTY. LTD.
33 Venture Way Braeside 3195
Victoria, Australia

Tel: +61 3 9587 3944
Fax: +61 3 9587 3179
Email: inquiries@doen.com

www.doen.com

DJ220-IWJ Waterjet

Performance **Reliability** Simplicity

Case Study 239: **25m Motor Yacht**

SPECIFICATIONS

Waterjet:	**DJ220-IWJ x2**
Engine:	**CAT C32** **1670 bhp @ 2300 rpm**
Gearbox:	**MG 6557SC 1.66:1**
Vessel:	**25.6m L.O.A** **24.2m W.L.L** **54 t (laden)**
Performance:	**35 knots**

Continental CNM80 – 25m Fibreglass Motor Yacht, Italy

This luxury fiberglass motor yacht was the first vessel built by this new Italian shipyard who's focus is on low volume high end quality products. Powered by twin Caterpillar diesel engines coupled to the **DOEN DJ220-IWJ** waterjets the vessel has a top speed in excess of 35knots in light condition. At trials this vessel demonstrated significanatly reduced noise and vibration levels attributed to the Integrated Waterjet system.

The Doen IWJ installation method provides a simple and extremely cost effective method for waterjet installation in fiberglass vessels as it allows the waterjet intake ducting to be laminated with the vessel hullform itself. To simplify the mechanical complexity and to further reduce the installed cost, the waterjet shaft is arranged to thrust directly to the gearbox as per conventional propeller arrangement. These **DJ220-IWJ** have all stainless steel pump assemblies. Fitted with 22" (560mm) single stage high performance axial flow impellers; these waterjets deliver excellent thrust and cruise efficiency.

The fully integrated hydraulic system operates the waterjet reverse and steering functions. Twin PTO driven hydraulic pumps supply the tank mounted control valve bank with all reverse and steering cylinders and hydraulic lines completely mounted inboard.

The vessel is fitted with Doen's **ECS-200** Control System. Configured for twin engine - twin station; this electronic control system provides primary control of engine throttle and gear command with the waterjet steering and reverse functions. Twin levers providing combined bucket and throttle control with steering by conventional helm wheel. Additionally the system provides the operator with all necessary monitoring, alarm and back-up control functions.

DOEN PACIFIC PTY. LTD.
33 Venture Way Braeside 3195
Victoria, Australia

Tel: +61 3 9587 3944
Fax: +61 3 9587 3179
Email: inquiries@doen.com

www.doen.com

DJ260 Waterjet

Performance **Reliability** Simplicity

Case Study 220: **25.4m Landing Craft**

SPECIFICATIONS

Waterjet:	**DJ260 x2**
Engine:	**Detroit S60** **448 kW @ 2300 rpm**
Gearbox:	**ZF2000, 3.0:1**
Vessel:	**25.4m L.O.A** **23.5m W.L.L** **135 t (full load)**
Performance:	**10.2 knots (full load)**

Royal Australian Navy (RAN) – Amphibious Watercraft

Designed and built by ADI Thales Australia to full Classification Society Standards and to meet the operational requirements of the Australian Defense Force; these six vessels were built to transport a battalion sized group of soldiers, equipment and stores from ship to shore. With a cargo capacity of 65tonnes, bow and stern ramps the vessel can carry a range of vehicles from Land Rovers to Leopard tanks. Waterjets were ultimately specified for their outstanding maneuverability and extreme shallow draft capability.

For maximum service life in this arduous application the **DJ260** waterjets have been specified with stainless steel pump assemblies fitted with 26” (660mm) high volume single stage axial flow impellers. These waterjets provide superior cavitation margins allowing full power application at any load condition and also at zero speed for maximum possible thrust during docking and station keeping maneuvers at sea. Doen’s pre-fabricated aluminium intake duct installation combines maximum vessel integrity with simple installation.

The fully integrated hydraulic systems operate the waterjet reverse and steering functions. Twin PTO driven hydraulic pumps supply the tank mounted control valve banks for reverse function and steering functions. All steering and reverse cylinders and their associated hydraulic lines completely mounted inboard.

The vessel is fitted with Doen’s **ECS-200** Control System. Configured for twin engine - twin station; this electronic control system provides primary control of engine throttle and gear command with the waterjet steering and reverse functions. Additionally the system provides the operator with all necessary monitoring, alarm and back-up control functions.

The waterjets and control system are supplied to **DNV** ✠ 1A1 LC Crew R1 (aus) E0**.**

DOEN PACIFIC PTY. LTD.
33 Venture Way Braeside 3195
Victoria, Australia

Tel: +61 3 9587 3944
Fax: +61 3 9587 3179
Email: inquiries@doen.com

www.doen.com

DJ220 Waterjet

Performance **Reliability** Simplicity

Case Study 216: **22.5m Fast Patrol Boat**

SPECIFICATIONS

Waterjet:	**DJ220**
Engine:	**MTU 16 V 2000 M90** **1800 hp @ 2300 rpm**
Gearbox:	**ZF BW 255 1.511:1**
Vessel:	**22.5m L.O.A** **18.4m W.L.L** **52 tonne (full load)**
Performance:	**42 knots (half load)**

Royal Malaysian Police – 22m High Speed Patrol Boat

Designed and supplied by renowned builder Strategic Marine, these 22.0m vessels are used for extended coastal patrols of a week to ten days, with a crew of nine. Powered by twin V16 MTU marine diesels of 1800hp coupled to the **DOEN DJ220** waterjets, the vessel is capable of sprint speeds in excess of 42knots (half load) and up to 38knots at full load. Fifteen of these vessels are now in service.

The project called for only stainless steel waterjets and the **DJ220** waterjets are subsequently specified with all stainless steel pump assemblies. Fitted with 22" (560mm) single stage high performance axial flow impellers; these waterjets deliver excellent high-speed efficiency with superior cavitation margins and efficiency at lower speeds and cruise conditions. Doen's pre-fabricated aluminium intake design made it possible to customise the inlet ducting and shaft line so as to facilitate waterjet installation into the unusual hull form without any compromise to the vessels' or waterjets performance. The waterjets and control system supplied to **DNV** +1A1 HSLC R3.

The fully integrated hydraulic system operates the waterjet reverse and steering functions. Twin PTO driven hydraulic pumps supply the tank mounted control valve bank with all reverse and steering cylinders and hydraulic lines completely mounted inboard.

The vessel is fitted with Doen's **ECS-200** Control System. Configured for twin engine - twin station; this electronic control system provides primary control of engine throttle and gear command with the waterjet steering and reverse functions. Twin levers providing combined bucket and throttle control with steering by conventional helm wheel. Additionally the system provides the operator with all necessary monitoring, alarm and back-up control functions.

DOEN PACIFIC PTY. LTD.
33 Venture Way Braeside 3195
Victoria, Australia

Tel: +61 3 9587 3944
Fax: +61 3 9587 3179
Email: inquiries@doen.com

www.doen.com

DJ260 Waterjet

Performance **Reliability** Simplicity

Case Study 211: **25m Patrol Boat**

SPECIFICATIONS

Waterjet:	**DJ260 x2**
Engine:	**MTU 12V 396 TE84 x 2** **1980 hp @ 1900 rpm**
Gearbox:	**ZF BW460 1.689:1**
Vessel:	**25.0m L.O.A** **22.6m W.L.L** **73.0 tonne**
Performance:	**35 knots**

Malaysian Marine Department– 25m High Speed Patrol Boat

Four vessels of the Bintang Class were constructed for the Malaysian Marine Department to conduct Surveillance and Patrol activities in and around Malaysia's Archipelago of protected Islands. Designed by Singapore's Shiptech and built by Mara Shipyard in Malaysia this vessel is powered by twin MTU V12 marine diesel engines coupled to the **DOEN DJ260** waterjets. It can deliver a maximum speed of 35knots and cruise at 30knots. Carrying 12crew it has an operational range of 612Nm.

These **DJ260** waterjets have all stainless steel pump assemblies. Fitted with 26" (660mm) single stage high performance axial flow impellers; these waterjets deliver excellent high-speed and long range cruise efficiency. Doen's pre-fabricated aluminium intake duct installation combines maximum vessel integrity with simple installation.

The fully integrated hydraulic systems operate the waterjet reverse and steering functions. Twin PTO driven hydraulic pumps supply the tank mounted control valve bank with for reverse function. A stand alone steering pump is driven directly off the engine. All steering and reverse cylinders and their associated hydraulic lines completely mounted inboard.

The vessel is fitted with Doen's Electronic Control and monitoring System. Configured for twin engine - four station; this electronic control system provides primary control of engine throttle and gear command with the reverse functions. Twin levers providing combined bucket and throttle control with steering by conventional helm wheel. Additionally the system provides the operator with all necessary monitoring, alarm and back-up control functions.

The waterjets and control system were supplied to **DNV class.**

DOEN PACIFIC PTY. LTD.
33 Venture Way Braeside 3195
Victoria, Australia

Tel: +61 3 9587 3944
Fax: +61 3 9587 3179
Email: inquiries@doen.com

www.doen.com

DJ220 Waterjet

Performance **Reliability** Simplicity

Case Study 206: **22.4m Patrol Boat**

SPECIFICATIONS

Waterjet:	**DJ220 x2**
Engine:	**MTU 12V 183 TE93** **846 kW @ 2400 rpm**
Gearbox:	**ZF BW165 2.00:1**
Vessel:	**22.4m L.O.A** **19.4m W.L.L** **45 t (full load)**
Performance:	**30 knots**

VIETNAMESE CUSTOMS DEPARTMENT – Fast Patrol Boats

With a draft of only 1.20m this waterjet Patrol Craft is able to operate in a wide range of coastal and inland waterways and if required may also be beached without special docking equipment. Powered by twin MTU V12 diesel engines coupled to the **DOEN DJ220** waterjets this vessel has a cruise speed of 27knots and a sprint speed of 30knots.

DJ220 waterjets fitted with 22" (560mm) single stage high performance axial flow impellers; these waterjets deliver excellent high-speed efficiency with superior cavitation margins and efficiency at lower speeds and cruise conditions. Doen's pre-fabricated aluminium intake design made it possible to customise the inlet ducting and shaft line so as to facilitate waterjet installation into the unusual hull form without any compromise to the vessels' or waterjets performance.

The fully integrated hydraulic systems operate the waterjet reverse and steering functions. Twin PTO driven hydraulic pumps supply the tank mounted control valve bank with for reverse function. A stand alone steering pump is driven directly off the engine. All steering and reverse cylinders and their associated hydraulic lines completely mounted inboard.

The waterjets are fitted with DOEN's Jogstick Reverse System (JRS); an electro hydraulic control system that provides non-follow up jog lever control of the waterjets reverse buckets. An analogue indicator is used to show the reverse bucket position. Steering is powered hydraulic by conventional helm wheel. The vessel is also fitted with and electronic throttle Control System. Configured for twin engine - twin station; this electronic control system provides primary control of engine throttle and gear command control functions.

The waterjets and control system were supplied to **USL Code 2B.**

DOEN PACIFIC PTY. LTD.
33 Venture Way Braeside 3195
Victoria, Australia

Tel: +61 3 9587 3944
Fax: +61 3 9587 3179
Email: inquiries@doen.com

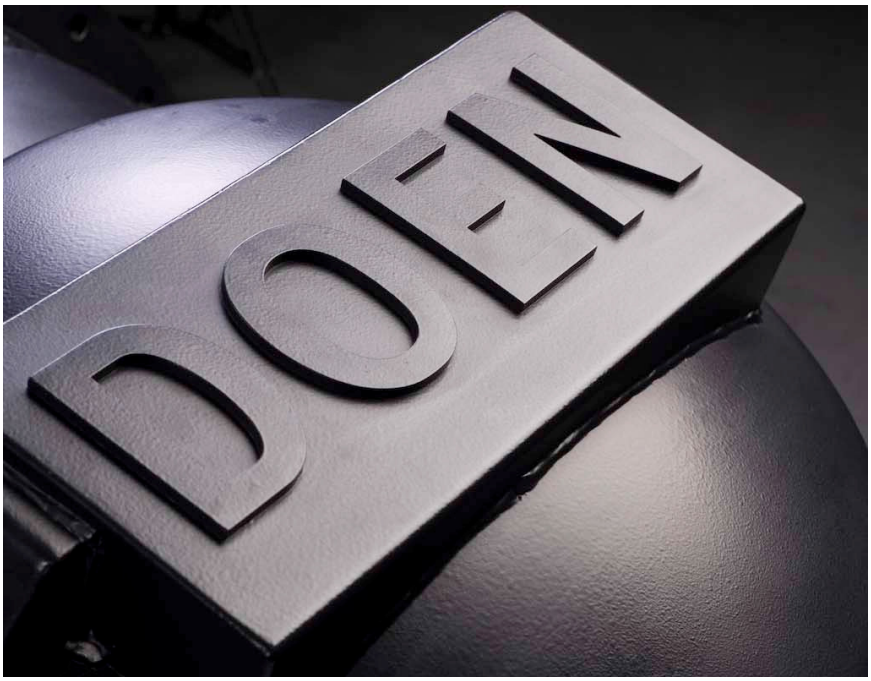

DOEN WATERJETS
33 VENTURE WAY
BRAESIDE
VICTORIA, 3195
AUSTRALIA
TEL: + 613 9587 3944
FAX: + 613 9587 3179

www.doen.com